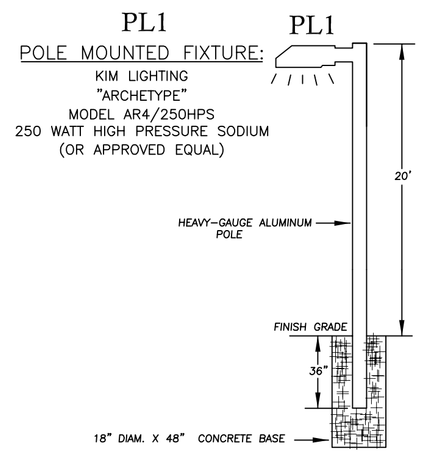

EXTERIOR LIGHTING FIXTURES

N.T.S.

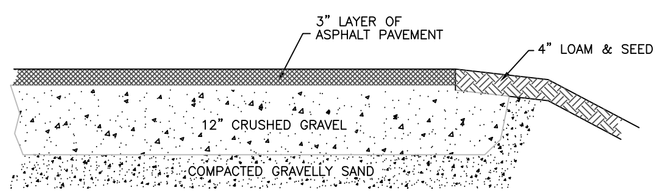

PARKING CROSS SECTION

N.T.S.

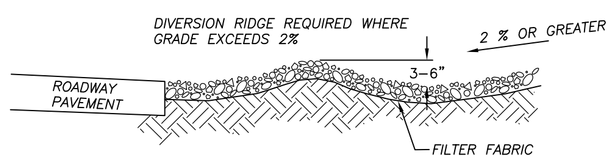

SECTION A – A

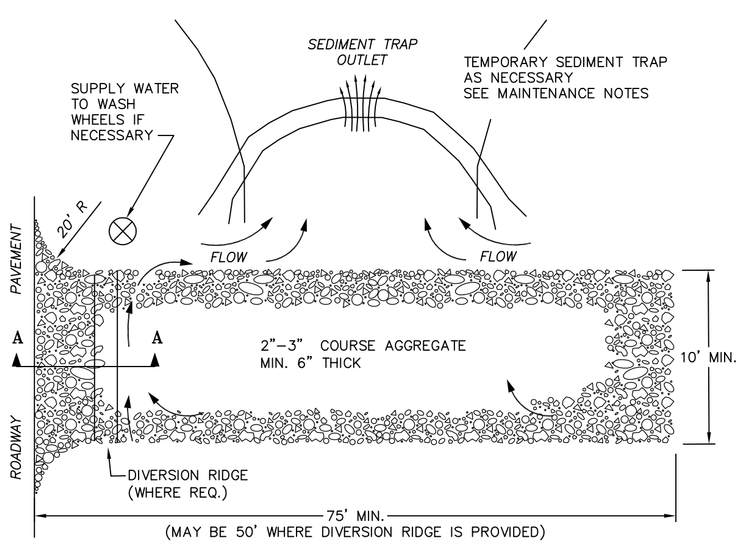

PLAN

INSTALLATION NOTES:
*THE MINIMUM STONE USED SHOULD BE 3-INCH CRUSHED STONE;
*THE MINIMUM LENGTH OF THE PAD SHOULD BE 75 FEET, EXCEPT THAT THE MINIMUM LENGTH MAY BE REDUCED TO 50 FEET IF A 3-INCH TO 6-INCH HIGH BERM IS INSTALLED AT THE EXIT OF THE PROJECT SITE;
*THE PAD SHOULD EXTEND THE FULL WIDTH OF THE CONSTRUCTION ACCESS ROAD OR 10 FEET, WHICHEVER IS GREATER;
*THE PAD SHOULD SLOPE AWAY FROM THE EXISTING ROADWAY;
*THE PAD SHOULD BE AT LEAST 6 INCHES THICK;
*A GEOTEXTILE FILTER FABRIC SHOULD BE PLACED BETWEEN THE STONE PAD AND THE COMPACTED SUBGRADE.

MAINTENANCE NOTES:
*WHEN THE CONTROL PAD BECOMES INEFFECTIVE, THE STONE SHOULD BE REMOVED ALONG WITH THE COLLECTED SOIL MATERIAL, REGRADED ON SITE, AND STABILIZED. THE EXIT SHOULD THEN BE RECONSTRUCTED;
*THE CONTRACTOR SHOULD SWEEP THE PAVEMENT AT EXITS WHENEVER SOIL MATERIALS ARE TRACKED ONTO THE ADJACENT PAVEMENT OR TRAVELED WAY;
*WHEN WHEEL WASHING IS REQUIRED, IT SHOULD BE CONDUCTED ON AN AREA STABILIZED WITH AGGREGATE, WHICH DRAINS INTO AN APPROVED SEDIMENT-TRAPPING DEVICE. ALL SEDIMENT SHOULD BE PREVENTED FROM ENTERING STORM DRAINS, DITCHES, OR WATERWAYS.

CONTROL PAD SHOULD BE REMOVED ONCE THE ENTIRE HAS BEEN STABILIZED SUCH THAT MATERIALS WILL NOT BE TRACKED ONTO THE EXISTING ROADWAY SURFACE.

TEMPORARY CONSTRUCTION EXIT DETAIL

N.T.S.

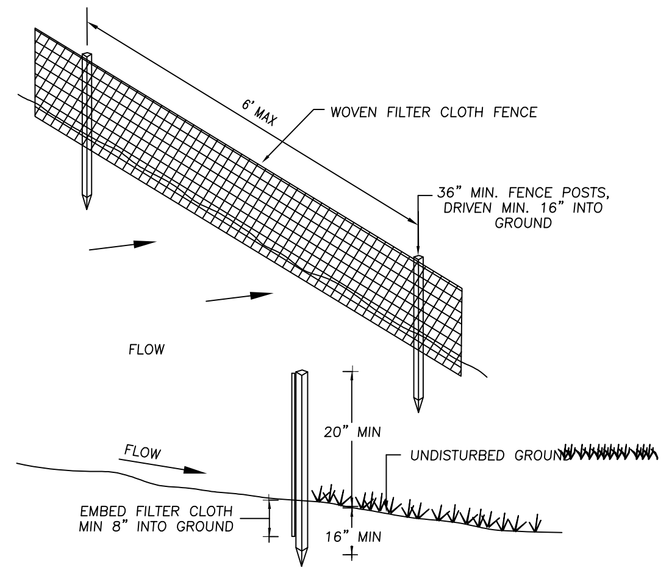

CONSTRUCTION NOTES FOR FABRICATED SILT FENCE
1. SILT FENCE SHALL BE PLACED PRIOR TO ANY CONSTRUCTION
2. WOVEN FILTER CLOTH TO BE FASTENED SECURELY TO FENCE POSTS WITH WIRE TIES OR STAPLES
3. WHEN TWO SECTIONS OF FILTER CLOTH ADJOIN EACH OTHER, THEY SHALL BE OVERLAPPED BY 6 INCHES AND FOLDED.
4. MAINTENANCE SHALL BE PERFORMED AS NEEDED AND MATERIAL REMOVED WHEN "BULGES" DEVELOP IN THE SILT FENCE.

SILT FENCE EROSION CONTROL DETAIL

N.T.S.

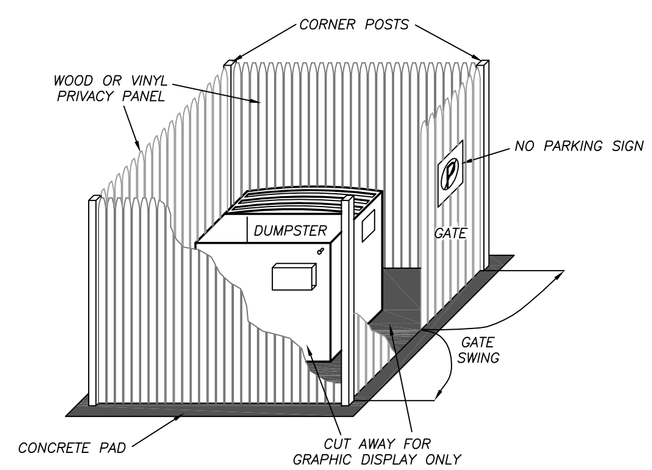

DUMPSTER SCREENING DETAIL

N.T.S.

PLANTING SCHEDULE:
* 3 – BIRDSFEET-TREFOL
* 3 – SWITCH GRASS
* 1 – WITCH HAZEL
* 1 – WINTERBERRY

PLANTS SHALL BE TRANSPLANTED FROM 8" CONTAINERS (MINIMUM) AND SHALL BE EVENLY SPACED THROUGHOUT THE RAIN GARDEN.

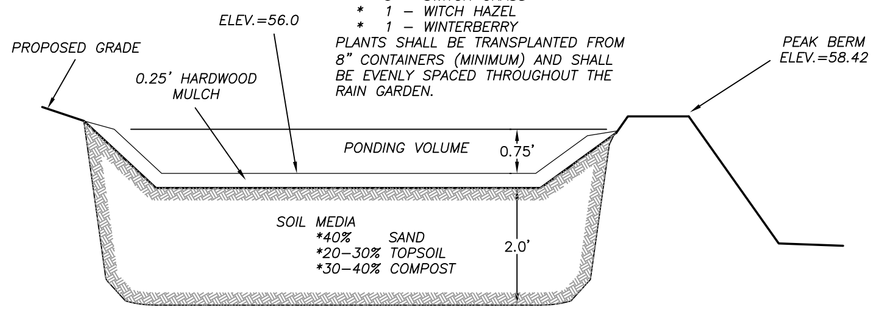

NOTES:
1. THE SOIL MEDIA SHALL BE UNIFORM, FREE OF STONES, STUMPS, ROOTS OR SIMILAR OBJECTS LARGER THAN 2".
2. THE SAND COMPONENT SHALL BE GRAVELLY SAND THAT MEETS ASTM D 422.
3. THE TOPSOIL COMPONENT SHALL BE A SANDY LOAM, LOAMY SAND OR LOAM TEXTURE.
4. THE COMPOST COMPONENT MUST BE PROCOSSED FROM YARD WASTE.

STORM EVENT	WATER LEVEL
1" STORM	56.04
2 YEAR	56.74
10 YEAR	57.13
25 YEAR	57.24
50 YEAR	57.33
100 YEAR	57.42

BIO-RETENTION AREA DETAIL

N.T.S.

NOTES:
- VERTICAL PIPE SHALL BE 12" DIAMETER SCH 40 PVC.
- CONNECTION BETWEEN VERTICAL PIPE AND CULVERT – P1 SHALL BE WATER TIGHT.
- TRASH RACK SHALL BE ALUMINUM WIRE WITH 2" O.C. SPACING.
- TRASH RACK SHALL BE FIXED TO VERTICAL PIPE IN A MINIMUM OF 4 EVENLY SPACED LOCATIONS, USING ALUMINUM OR STAINLESS STEEL FASTENERS.

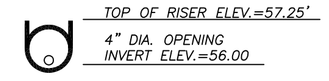

FRONT VIEW

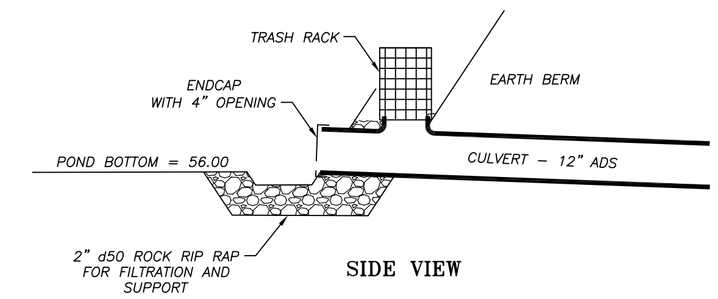

SIDE VIEW

OUTLET CONTROL DETAIL

N.T.S.

*TOP AND OUTSIDE SLOPE OF BERM TO BE VEGETATED. SEE SEEDING AREA PREPARATION AND SEEDING DETAILS.
*SAND MATERIAL TO BE CONCRETE SAND MEETING ASTM C-33 SPECIFICATION.
*N.A.G. – SC250 COMPOSITE TURF REINFORCEMENT MAT. NORTH AMERICAN GREEN PRODUCT INFORMATION AVAILABLE AT 1-800-772-2040 OR WWW.NAGREEN.COM

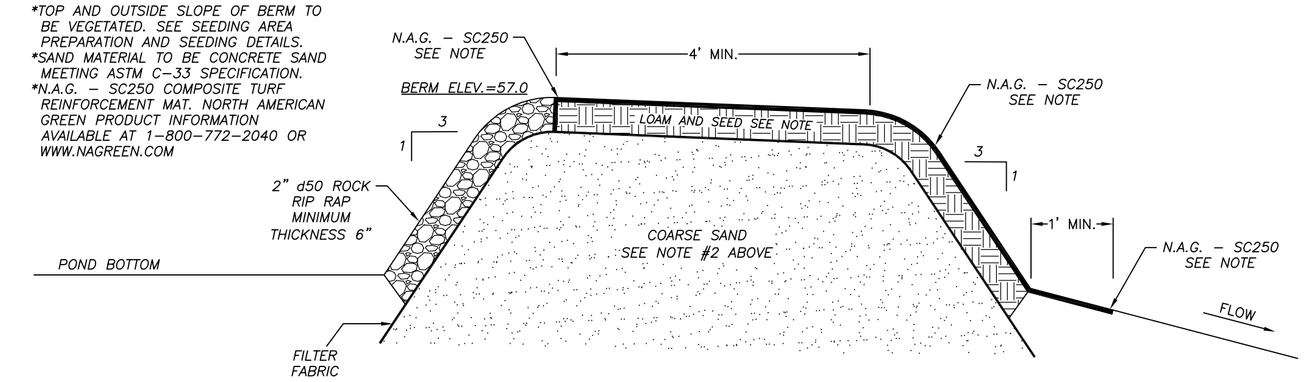

LEACHING BERM DETAIL

N.T.S.

THE STATE OF NEW HAMPSHIRE
DENNIS G. QUINTAL No. 8401
LICENSED PROFESSIONAL ENGINEER

DENNIS G. QUINTAL, P.E. DATE

#	DATE	REVISION
1	01-08-15	ADD DUMPSTER & ENTRANCE DETAILS

DETAILS

TAX MAP 18 - LOT 3-2

257 NEWMARKET ROAD
DURHAM, NH

OWNER/APPLICANT: SEACOAST OPM REALTY, LLC
P.O. BOX 1733
DOVER, NH 03821

DESIGN BY:
Civil Construction Management Inc.
8 Merrimac Road, Box 475
Newton, NH 03858
Tel (603) 382-7650

DRAWN BY: D. NALLY, MSCE CHK BY: D. QUINTAL, PE
DESIGNED BY: D. NALLY, MSCE DATE: 11-14-14

Sheet: D

JOB #14093