RIVERWOODS DURHAM

STONE QUARRY DRIVE

DURHAM, NEW HAMPSHIRE

PLANNING BOARD SUBMISSION

Plan Issue Dates:

Design Review	April 19, 2017
Site Plan Submission	July 19, 2017
Site Plan Re-Submission	October 16, 2017
Site Plan Re-Submission	December 5, 2017
NHDES AoT Submission	January 18, 2018
Bid Set	April 2, 2018
100% Construction Doc.s	April 13, 2018
Final Town Approval	May 23, 2018

Sheet Index

Title		
Existing Conditions Plan (Atlantic Survey Co.)	1 of 1	–
Lot Line Adjustment Plan (Atlantic Survey Co.)	G-1.0	–
Easement Plan	1 of 1	–
General Notes & Legend	G-1.1	9
Site-Specific Soil Survey Plan	G-2.0	7
Geotechnical Investigation Plan	G-2.1	9
Blasting Plan and Notes	G-2.2	7
Site Preparation Plan	C-1.0	9
Site Plan	C-2.0	14
Layout Plan – A	C-3.0	8
Layout Plan – B	C-3.1	8
Utility Plan – A	C-4.0	10
Utility Plan – B	C-4.1	10
Off-Site Utility Extension Plan	C-4.2	14
Off-Site Utility Extension Plan	C-4.3	14
Off-Site Utility Enlargement Plan A	C-4.4	6
Off-Site Utility Enlargement Plan B	C-4.5	6
Off-Site Utility Enlargement Plan C	C-4.6	4
Off-Site Utility Enlargement Plan D	C-4.7	3
Work Zone Traffic Signs	C-4.8	2
Overall Grading Plan	C-5.0	10
Grading Plan – A	C-5.1	10
Grading Plan – B	C-5.2	10
Courtyard Enlargement Plan	C-5.2A	5
Grading Plan – C	C-5.3	10
Grading Plan – D	C-5.4	10
Main Entrance Enlargement Plan	C-5.4A	4
Stormwater Management Gallery – Cross Sections	C-5.5	8
Stormwater Management Gallery – Cross Sections	C-5.6	8
Stormwater Management Gallery – Layout	C-5.7	7
Stormwater Management Gallery – Layout	C-5.8	8
Stormwater Management Gallery – Layout	C-5.9	7
Stormwater Management Gallery – Details	C-5.10	7
Stormwater Management Gallery – Details	C-5.11	7
Porous Pavement East – Cross Section	C-5.12	7
Porous Pavement West – Cross Section	C-5.13	7
Site Landscape Plan	L-1	0
Main Entry Landscape Plan	L-2	0
Area B Landscape Plan	L-3	0
Area A Landscape Plan	L-4	0
Area D Entry Landscape Plan	L-5	0
Area C & Health Care Garden Landscape Plan	L-6	0
Landscape Details	L-7	0
Landscape Details	L-8	0
Site Lighting	1 of 1	–
Erosion Control Notes	C-6.0	9
Erosion Control Details	C-6.1	9
Detail Sheet	C-6.2	9
Detail Sheet	C-6.3	9
Detail Sheet	C-6.4	9
Sewer Detail Sheet	C-6.5	11
Sewer Detail Sheet	C-6.6	12
Water Detail Sheet	C-6.7	9
Site Details	G230	–

Applicant:

The RiverWoods Group
5 White Oak Drive
Exeter, New Hampshire 03833
Tel. (603) 772-4700

Owner (Subject Parcel):

RiverWoods Durham
5 White Oak Drive
Exeter, New Hampshire 03833
Tel. (603) 772-4700

Architect:

Architecture
1414 UNDERWOOD AVE.
WAUWATOSA, WI 53213
414.431.3131 TEL
414.431.0931 FAX
WWW.AGARCH.COM

Civil Engineer:

ALTUS ENGINEERING, INC.
133 COURT STREET PORTSMOUTH, NH 03801
(603) 433-2335 www.ALTUS-ENG.com

Landscape Architect:

woodburn &company
LANDSCAPE ARCHITECTURE
103 Kent Place Newmarket, New Hampshire Phone: 603.659.5949

MEP:

PEC
Professional EngineeringConsultants, P.A.
623 Massachusetts, Suite
200 Lawrence, KS 66044
Tel. (785) 842-6464

Wetlands/Soils Scientist:

GZA GeoEnvironmental, Inc.
5 Commerce Park
North Bedford, NH 03110 Tel.
(603) 232-8739

Surveyor:

ATLANTIC SURVEY COMPANY
25 Nute Road, Dover, New Hampshire 03820

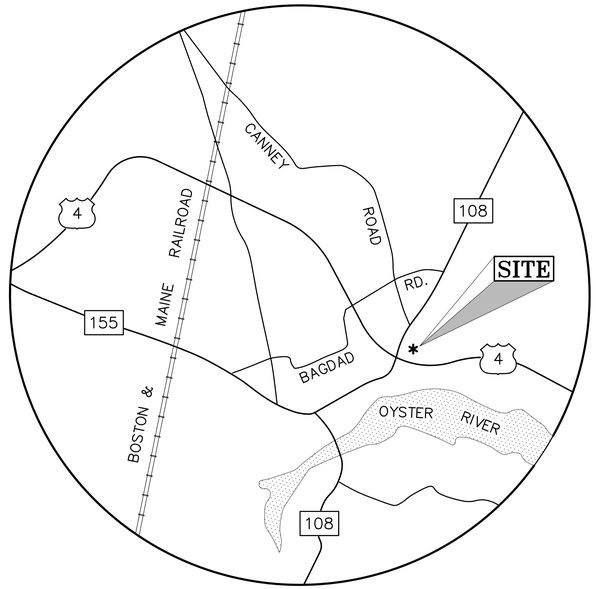

LOCATION PLAN

PERMIT APPROVAL NOTES:

CONSTRUCTION SHALL NOT COMMENCE UNTIL ALL REGULATORY APPROVALS HAVE BEEN RECEIVED. THE CONTRACTOR SHALL BE RESPONSIBLE FOR CONSTRUCTING THE PROJECT IN ACCORDANCE WITH ALL CONDITIONS OF THE APPROVALS.

- CONDITIONAL USE PERMIT, DATED JANUARY 10, 2018 (SITE PLAN, L.L.A. & CONDITIONAL USES)
- PRELIMINARY SITE PLAN APPROVAL, DATED JANUARY 10, 2018
- TOWN COUNCIL SEWER AND WATER EXTENSION APPROVAL, DATED FEB. 5, 2018
- CONDITIONAL USE PERMIT, DATED MARCH 14, 2018 (SEWER IN WETLAND BUFFER)
- NHDES AoT PERMIT: AoT-1399, DATED APRIL 1, 2018
- NHDOT DRIVEWAY PERMIT #06-133-237, DATED APRIL 16, 2018
- NHDES SEWER CONNECTION PERMIT #D2018-0404, DATED APRIL 17, 2018
- TOWN DRIVEWAY PERMIT, DATED APRIL 17, 2018
- NHDES SHORELAND IMPACT PERMIT #2018-00968, DATED APRIL 27, 2018
- NHDES WETLANDS AND NON-SITE SPECIFIC PERMIT #2018-00607, DATED MAY 16, 2018
- NHDOT EXCAVATION PERMIT, DATED _____

P4836

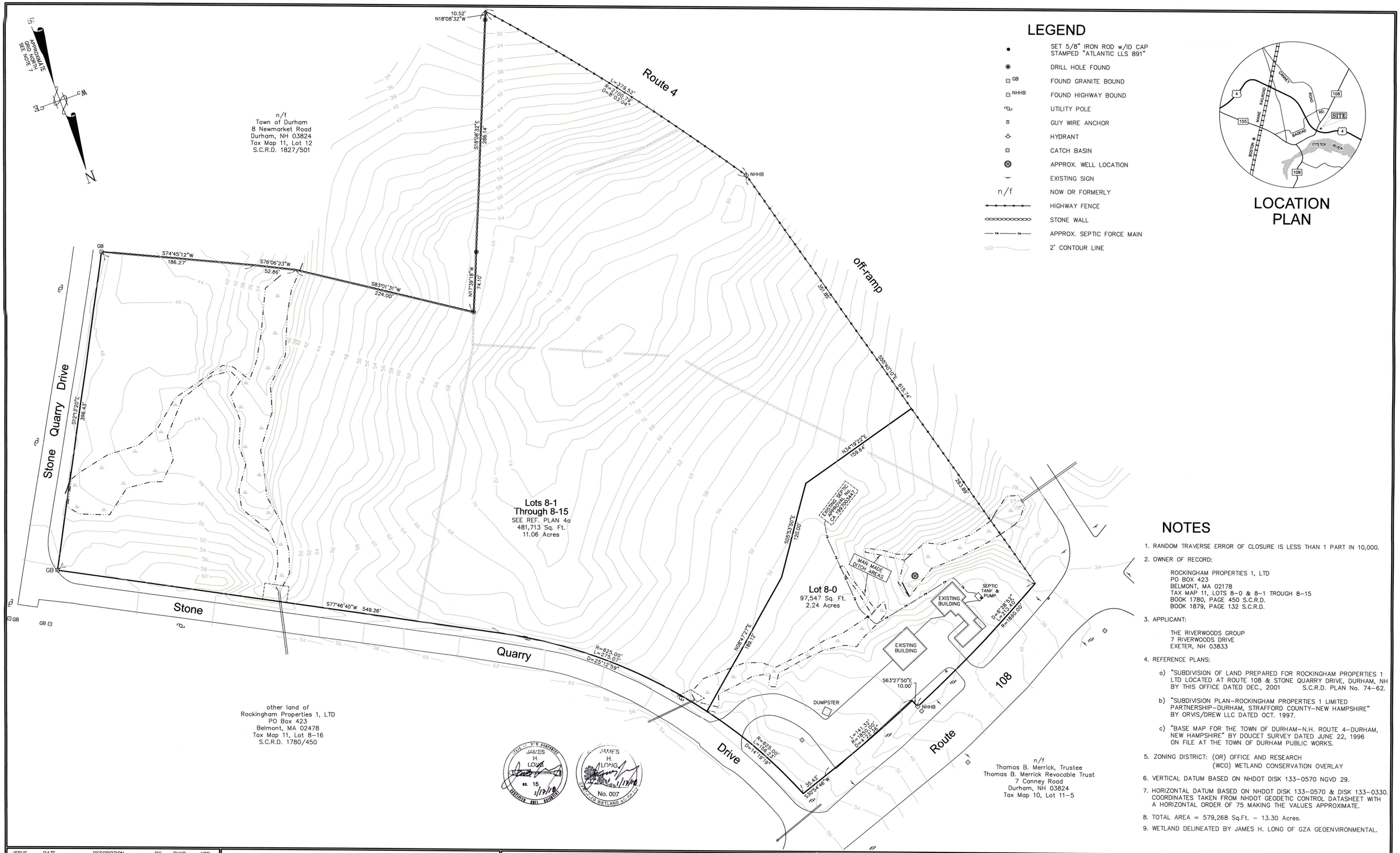

LEGEND

- SET 5/8" IRON ROD w/ID CAP STAMPED "ATLANTIC LLS 891"
- DRILL HOLE FOUND
- GB — FOUND GRANITE BOUND
- NHHB — FOUND HIGHWAY BOUND
- UTILITY POLE
- GUY WIRE ANCHOR
- HYDRANT
- CATCH BASIN
- APPROX. WELL LOCATION
- EXISTING SIGN
- n/f — NOW OR FORMERLY
- HIGHWAY FENCE
- STONE WALL
- FM — FM — APPROX. SEPTIC FORCE MAIN
- 102 — 2' CONTOUR LINE

LOCATION PLAN

NOTES

1. RANDOM TRAVERSE ERROR OF CLOSURE IS LESS THAN 1 PART IN 10,000.
2. OWNER OF RECORD:

   ROCKINGHAM PROPERTIES 1, LTD
   PO BOX 423
   BELMONT, MA 02178
   TAX MAP 11, LOTS 8-0 & 8-1 TROUGH 8-15
   BOOK 1780, PAGE 450 S.C.R.D.
   BOOK 1879, PAGE 132 S.C.R.D.
3. APPLICANT:

   THE RIVERWOODS GROUP
   7 RIVERWOODS DRIVE
   EXETER, NH 03833
4. REFERENCE PLANS:

   a) "SUBDIVISION OF LAND PREPARED FOR ROCKINGHAM PROPERTIES 1 LTD LOCATED AT ROUTE 108 & STONE QUARRY DRIVE, DURHAM, NH BY THIS OFFICE DATED DEC., 2001 S.C.R.D. PLAN No. 74-62.

   b) "SUBDIVISION PLAN-ROCKINGHAM PROPERTIES 1 LIMITED PARTNERSHIP-DURHAM, STRAFFORD COUNTY-NEW HAMPSHIRE" BY ORVIS/DREW LLC DATED OCT. 1997.

   c) "BASE MAP FOR THE TOWN OF DURHAM-N.H. ROUTE 4-DURHAM, NEW HAMPSHIRE" BY DOUCET SURVEY DATED JUNE 22, 1996 ON FILE AT THE TOWN OF DURHAM PUBLIC WORKS.
5. ZONING DISTRICT: (OR) OFFICE AND RESEARCH
   (WCO) WETLAND CONSERVATION OVERLAY
6. VERTICAL DATUM BASED ON NHDOT DISK 133-0570 NGVD 29.
7. HORIZONTAL DATUM BASED ON NHDOT DISK 133-0570 & DISK 133-0330. COORDINATES TAKEN FROM NHDOT GEODETIC CONTROL DATASHEET WITH A HORIZONTAL ORDER OF 75 MAKING THE VALUES APPROXIMATE.
8. TOTAL AREA = 579,268 Sq.Ft. - 13.30 Acres.
9. WETLAND DELINEATED BY JAMES H. LONG OF GZA GEOENVIRONMENTAL.

ISSUE	DATE	DESCRIPTION	BY	CHKD.	APP.

GRAPHIC SCALE
50 0 25 50 100 200
(IN FEET)
1 inch = 50 ft.

ATLANTIC SURVEY CO. LLC
25 Nute Road, Dover, New Hampshire 03820
PREPARED BY:
SURVEYORS
PLANNERS
SEPTIC DESIGNERS
603-659-8939

STATE OF NEW HAMPSHIRE — No. 891 ADAM R. FOGG — LICENSED LAND SURVEYOR — SIGNATURE

DATE:	Dec., 2017
FIELDWORK BY:	AF, TF
DESIGNED BY:	AF
CAD FILE:	17109-ExCP
PROJECT No.:	17109
SHEET	1 OF 1

EXISTING CONDITIONS PLAN

PREPARED FOR

The Riverwoods Group

LOCATED AT

Route 108 & Stone Quarry Drive, Durham, N.H.

Doc # 0006644 May 4, 2018 3:54 PM
Plan 115-065 1 of 1
Register of Deeds, Strafford County
C/H L-CHIP STA:129066

Route 4

off-ramp

Route 108

Stone Quarry Drive

n/f
Town of Durham
15 Newmarket Road
Durham, NH 03824
Tax Map 11, Lot 12
S.C.R.D. 1827/501
EVEN LAND SWAP

"PARCEL 1"
LOT LINE ADJUSTMENT IN FAVOR OF LOTS 8-1 THRU 8-15
40,848 S.F. OR 0.94 AC.

"PARCEL 2"
LOT LINE ADJUSTMENT IN FAVOR OF LOT 11-12
40,846 S.F. OR 0.94 AC.

"PARCEL 3"
LOT LINE ADJUSTMENT IN FAVOR OF LOT 8-1 THROUGH 8-15
10,205 S.F. OR 0.23 AC.

SUBJECT PARCEL
Tax Map 11
Lots 8-1 thru 8-15
and Valbeth Lane
R.O.W. MERGED
481,713 S.F. OR 11.06 AC.
PROPOSED AREA
491,918 S.F. OR 11.29 AC.

LOT 8-0
Previous Area
97,547 S.F. OR 2.40 AC.
Proposed Area
87,342 S.F. OR 2.01 AC.

EXISTING LOT LINE TO BE ABANDONED

PROPOSED LOT LINE

EXISTING POLE BARN

EXISTING POLICE SHOOTING RANGE

BUILDING

BARN

DRAINAGE EASEMENT PER PLAN REFERENCE 2e.

other land of
Rockingham Properties 1, LTD
PO Box 423
Belmont, MA 02178
Tax Map 11, Lot 8-2
S.C.R.D. 1780/450

n/f
Thomas B. & Mary E. Merrick
7 Cannay Road
Durham, NH 03824
Tax Map 10, Lot 11-5

LOCATION PLAN

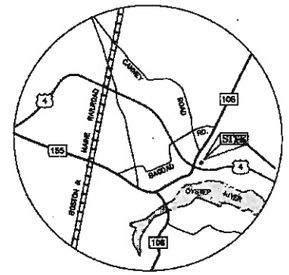

LEGEND

- 5/8" IRON ROD w/ID CAP TO BE SET
- DRILL HOLE FOUND
- FOUND GRANITE BOUND
- n/f NOW OR FORMERLY
- S.C.R.D. STRAFFORD COUNTY REGISTRY OF DEEDS
- EXISTING HIGHWAY FENCE
- STONE WALL

GRAPHIC SCALE
(IN FEET)
1 inch = 50 ft.

FINAL APPROVAL FOR LOT LINE ADJUSTMENT ONLY
CERTIFIED BY MICHAEL REBRENDT, TOWN PLANNER
CERTIFIED
DATE MAY 2, 2018

REVISED LOT AREAS			
MAP	LOT	OLD LOT AREA	NEW LOT AREA
11	8-0	97,547 s.f.	87,342 s.f.
11	8-1 THROUGH 8-15	481,713 s.f.	491,918 s.f.
11	12	443,912 s.f.	443,912 s.f.

NOTES

1. RANDOM TRAVERSE ERROR OF CLOSURE IS LESS THAN 1 PART IN 10,000.
2. REFERENCE PLANS:
   a) "TEMPORARY SHOOTING RANGE PREPARED FOR TOWN OF DURHAM POLICE DEPARTMENT" BY MJS ENGINEERING, P.C., DATED 2/16/16
   b) "EXISTING CONDITIONS PLAN PREPARED FOR THE RIVERWOODS GROUP", BY ATLANTIC SURVEY COMPANY, DATED APRIL 2017
   c) "BASE MAP FOR THE TOWN OF DURHAM-NEW HAMPSHIRE" BY DOUCET SURVEY DATED JUNE 22, 1988 ON FILE AT THE TOWN OF DURHAM PUBLIC WORKS.
   d) "SUBDIVISION OF LAND PREPARED FOR ROCKINGHAM PROPERTIES 1 LTD LOCATED AT ROUTE 108 & STONE QUARRY DRIVE, DURHAM, NH BY ATLANTIC SURVEY CO, LLC DATED DEC., 2001 S.C.R.D. PLAN No. 74-83.
3. The parcel shown as "Parcel 1" will be conveyed to Riverwoods Durham by the Town of Durham at an or even date with the recording of this Lot Line Adjustment Plan and the parcel will be consolidated with Lots 8-1 through 8-15.
4. The parcel shown as "Parcel 2" will be conveyed to the Town of Durham by Riverwoods Durham at an or even date with the recording of this Lot Line Adjustment Plan and the parcel will be consolidated with Lot 11-12.
5. The parcel shown as "Parcel 3" will be conveyed to the Riverwoods Durham by Land Options, LLC at an or even date with the recording of this Lot Line Adjustment Plan and the parcel will be consolidated with Lots 8-1 through 8-15.
6. Approval of this Lot Line Adjustment Plan does not guarantee that final approval for the Site Plan will be granted.

DATE: APRIL 30, 2018

DRAWN BY: RMB
APPROVED BY: JKC, AF
DRAWING FILE: 4836SITE.DWG

SCALE: 1 " = 50'

OWNERS:

MAP 11 LOTS 8-1 TO 8-15
ROCKINGHAM PROPERTIES 1, LTD
S.C.R.D. BOOK 1780 PAGE 450
S.C.R.D. BOOK 1879 PAGE 132
P.O. BOX 423
BELMONT, MA 02178

LOT 8-0
LAND OPTIONS, LLC
S.C.R.D. BOOK 4484 PAGE 508
96 CLIFF ROAD
PORTSMOUTH, NH 03801

LOT 11-12
TOWN OF DURHAM
S.C.R.D. BOOK 1827 PAGE 501
15 NEWMARKET ROAD
DURHAM, NH 03824

APPLICANT:

THE RIVERWOODS GROUP
7 RIVERWOODS DRIVE
EXETER, NH 03833

PROJECT:

RIVERWOODS DURHAM
STONE QUARRY DRIVE
DURHAM, NH

TITLE:
Lot Line Adjustment Plan
PREPARED FOR
THE RIVERWOODS GROUP
LOCATED AT
STONE QUARRY DR & RTE 108
DURHAM, NH

SHEET NUMBER:
G - 1.0

ATLANTIC SURVEY COMPANY
25 Nute Road, Dover, New Hampshire 03820

Doc # 0005845 May 4, 2018 3:54 PM
Plan 115-098 1 of 1
Register of Deeds, Strafford County

NOTES - Continued

5. Permanent easements over land of Riverwoods Durham will be granted to the Town to maintain, repair and replace municipal water and sewer systems to include lines, mains and appurtenances of such systems. Such easements are to be located on the consolidated lot of Riverwoods Durham as shown on a plan of land entitled "Lot Line Adjustment Plan. Prepared for The Riverwoods Group, Located at Stone Quarry Dr. & Rte. 108, Durham, NH" prepared by Atlantic Survey Company dated April 30, 2018. The width of the easements are 30 feet centered on the installed systems. The location of the easements shall be depicted on an As-Built plan prepared by Atlantic Survey Company. Said plan is a permanent record of the Durham Planning Board.

6. A permanent easement over land of Land Options, LLC will be granted to the Town to maintain, repair and replace municipal sewer systems to include lines, mains and appurtenances of such systems. The width of the easement is 30 feet centered on the installed systems. The easements shall be located on an As-Built plan prepared by Atlantic Survey Company. Said plan is a permanent record of the Durham Planning Board.

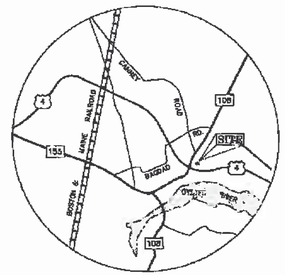

LOCATION PLAN

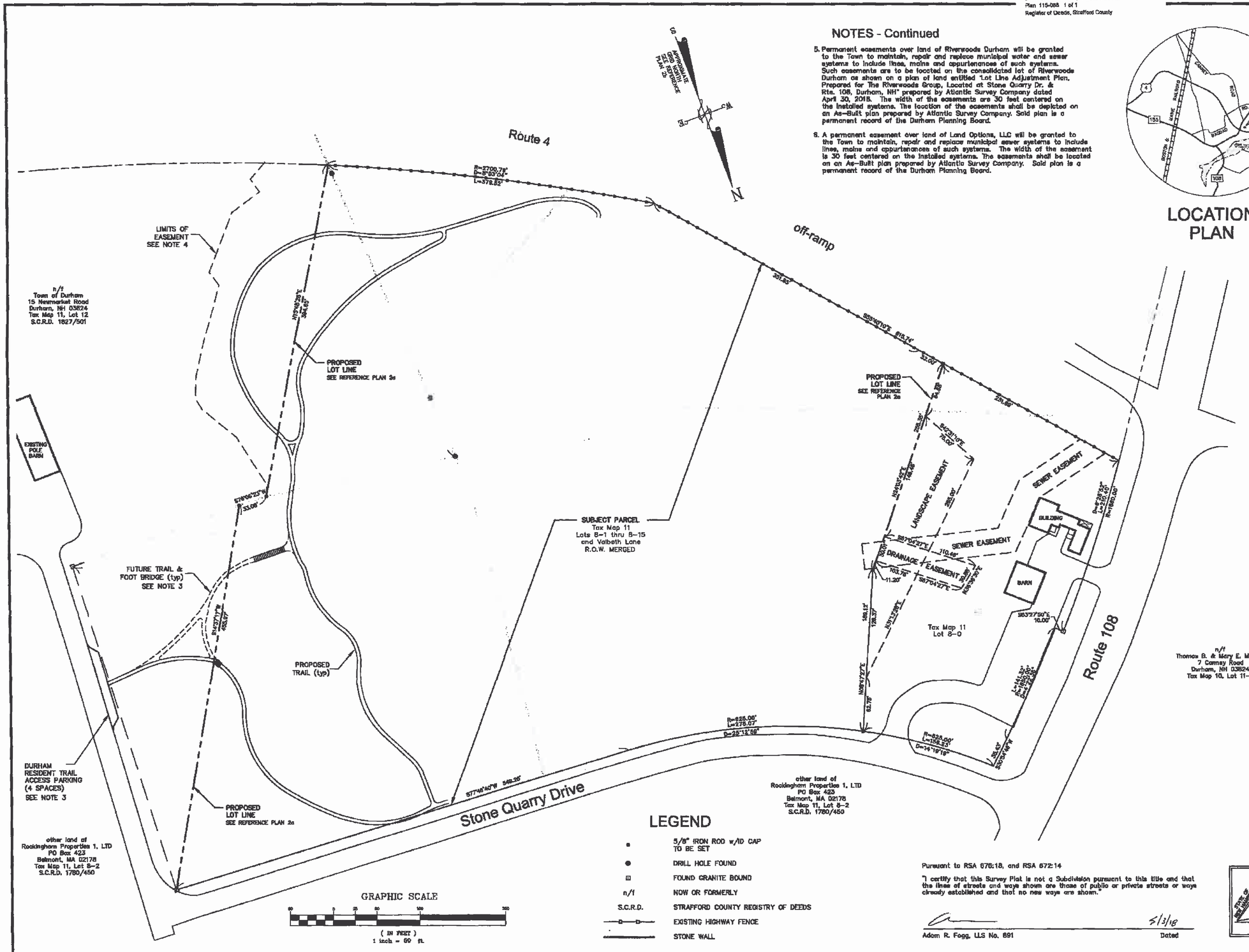

LEGEND

●	5/8" IRON ROD w/ID CAP TO BE SET
●	DRILL HOLE FOUND
⊡	FOUND GRANITE BOUND
n/f	NOW OR FORMERLY
S.C.R.D.	STRAFFORD COUNTY REGISTRY OF DEEDS
—o—o—	EXISTING HIGHWAY FENCE
———	STONE WALL

GRAPHIC SCALE

(IN FEET)
1 inch = 60 ft.

Pursuant to RSA 676:18, and RSA 672:14

"I certify that this Survey Plat is not a Subdivision pursuant to this title and that the lines of streets and ways shown are those of public or private streets or ways already established and that no new ways are shown."

5/3/18

Adam R. Fogg, LLS No. 891 — Dated

ADAM R. FOGG No. 891 — LICENSED LAND SURVEYOR — STATE OF NEW HAMPSHIRE

P4836

ATLANTIC SURVEY COMPANY
25 Nute Road, Dover, New Hampshire 03820

NOTES

1. RANDOM TRAVERSE ERROR OF CLOSURE IS LESS THAN 1 PART IN 10,000.
2. REFERENCE PLAN:
   a) "LOT LINE ADJUSTMENT PLAN PREPARED FOR THE RIVERWOODS GROUP LOCATED AT STONE QUARRY DR. & ROUTE 108, DURHAM, N.H." DATED APRIL 30, 2018 TO BE RECORDED.
3. EASEMENT RIGHTS ARE RESERVED FOR RIVERWOODS TO CONSTRUCT, OPERATE, MAINTAIN AND REPAIR THE WALKING TRAILS AND PARKING AREA AS SHOWN ON SHEET C-2.0 OF THE FINAL SITE PLAN APPROVED BY THE DURHAM PLANNING BOARD AND WHICH IS ON FILE AT THE PLANNING DEPARTMENT AT THE DURHAM TOWN HALL. FOR FURTHER REFERENCE, SEE WARRANTY DEED TO BE RECORDED AT OR ON EVEN DATE FROM RIVERWOODS DURHAM TO THE TOWN OF DURHAM.
4. TRAIL EASEMENT TO BENEFIT RIVERWOODS DURHAM. FOR FURTHER REFERENCE, SEE WARRANTY DEED TO BE RECORDED AT OR ON EVEN DATE THE TOWN OF DURHAM TO RIVERWOODS DURHAM.

DATE: APRIL 9, 2018

DRAWN BY: AF
APPROVED BY: JKC, AF
DRAWING FILE: 4836SITE.DWG

SCALE: 1 " = 50'

OWNERS:

MAP 11 LOTS 8-1 TO 8-15
ROCKINGHAM PROPERTIES 1, LTD
S.C.R.D. BOOK 1780 PAGE 450
S.C.R.D. BOOK 1879 PAGE 132
P.O. BOX 423
BELMONT, MA 02178

LOT 8-0
LAND OPTIONS, LLC
S.C.R.D. BOOK 4484 PAGE 508
96 CLIFF ROAD
PORTSMOUTH, NH 03801

LOT 11-12
TOWN OF DURHAM
S.C.R.D. BOOK 1827 PAGE 501
16 NEWMARKET ROAD
DURHAM, NH 03824

APPLICANT:

THE RIVERWOODS GROUP
7 RIVERWOODS DRIVE
EXETER, NH 03833

PROJECT:

RIVERWOODS DURHAM
STONE QUARRY DRIVE
DURHAM, NH

TITLE:

Proposed Easement Plan

PREPARED FOR

THE RIVERWOODS GROUP

LOCATED AT

STONE QUARRY DR & RTE 108
DURHAM, NH

SHEET NUMBER:

1 of 1

LEGEND

	UTILITY POLE
n/f	NOW OR FORMERLY
	HIGHWAY FENCE
	STONE WALL
102	2' CONTOUR LINE
	JURISDICTIONAL WETLAND
	WETLAND SYMBOL
	75' WETLANDS SETBACK
G G G	EXIST. GAS LINE
OHV OHV	EXIST. OVERHEAD WIRES
D D D	EXIST. DRAIN LINE
	EXIST. CULVERT
	PROP. SEDIMENTATION BARRIER
PV PV	PROP. WATER LINE
WV	PROP. GATE VALVE
PS PS	PROP. SEWER LINE
PSMH	PROP. SEWER MANHOLE
ETC ETC	PROP. UNDERGROUND ELEC./TELE./COMMUNICATION
PE PE	PROP. ELECTRICAL CONDUIT
	PROP. LIGHT POLE
	PROP. BOLLARD LIGHT
PG	PROP. GAS LINE
PD PD	PROP. DRAIN LINE
FD FD	PROP. FOOTING DRAIN
PUD PUD	PROP. PERFORATED UNDERDRAIN
RD RD	PROP. ROOF DRAIN
	PROP. STORMWATER MANAGEMENT GALLERY (SMG)
PDMH	PROP. DRAIN MANHOLE
PCB	PROP. CATCH BASIN
PDI	PROP. DROP INLET STRUCTURE
PAD	PROP. AREA DRAIN
	PROP. GUARD RAIL
BW	BOTTOM OF WALL
CO	PROP. CLEANOUT
CPE	CORRUGATED POLYETHYLENE PIPE
D.S.	DOWN SPOUT
D.I.	DUCTILE IRON
HDPE	HIGH-DENSITY POLYETHYLENE PIPE
MEP	MECHANICAL/ELECTRICAL/PLUMBING
MFES	METAL FLARED END SECTION
PSMH	PROP. SEWER MANHOLE
PUSF	PROP. UNDERGROUND SAND FILTER
PVC	POLYMERIZED VINYL CHLORIDE PIPE
R.L.	ROOF LEADER
SMG	STORMWATER MANAGEMENT GALERY
TW	TOP OF WALL

CONSTRUCTION NOTES:

1. DO NOT BEGIN CONSTRUCTION UNTIL ALL LOCAL PERMITS HAVE BEEN APPLIED FOR AND RECEIVED. THE LANDOWNER AND CONTRACTOR ARE RESPONSIBLE FOR COMPLYING WITH ALL LOCAL, STATE, AND FEDERAL WETLANDS REGULATIONS, INCLUDING ANY PERMITTING AND SETBACKS REQUIREMENTS REQUIRED UNDER THESE REGULATIONS. SEE PROJECT MANUAL APPENDICES FOR COPY OF PERMITS.
2. CONTRACTOR SHALL OBTAIN A "DIGSAFE" NUMBER AND NOTIFY OWNER'S AUTHORIZED REPRESENTATIVE AT LEAST 72 HOURS PRIOR TO COMMENCING CONSTRUCTION.
3. SITE CONSTRUCTION SHALL COMPLY WITH THE RULES AND REGULATIONS OF THE AMERICANS WITH DISABILITIES ACT (ADA) AS PUBLISHED IN THE FEDERAL REGISTER, VOL. 56, NO. 144, DATED JULY 26, 1991.
4. COORDINATE ALL WORK WITHIN TEN (10') FEET OF PROPOSED BUILDINGS WITH BUILDING CONTRACTOR AND ARCHITECTURAL DRAWINGS.
5. CONTRACTOR SHALL REMOVE AND DISPOSE OF EXISTING STRUCTURES, BITUMINOUS CONCRETE, DEBRIS, AND CONSTRUCTION WASTE PRODUCTS WHICH ARE NOT AUTHORIZED, TO BE USED AS PART OF CONSTRUCTION. DISPOSE OF EXCESS MATERIALS OFF-SITE IN ACCORDANCE WITH NH DEPARTMENT OF ENVIRONMENTAL SERVICES REQUIREMENTS.
6. CLEAN AND COAT VERTICAL FACE OF EXISTING PAVEMENT AT SAWCUT LINE WITH RS-1 IMMEDIATELY PRIOR TO PLACING NEW BITUMINOUS CONCRETE.
7. STRIPE PARKING AND DRIVES AS SHOWN INCLUDING PARKING SPACES. ALL MARKINGS TO BE CONSTRUCTED USING WHITE TRAFFIC PAINT, MEETING THE REQUIREMENTS OF AASHTO M248, TYPE F.
8. ALL PAVEMENT MARKINGS AND SIGNS TO CONFORM TO ADA REQUIREMENTS AND "MANUAL ON UNIFORM TRAFFIC DEVICES" AND "STANDARD ALPHABETS OF HIGHWAY SIGNS AND PAVEMENT MARKINGS" LATEST EDITIONS.
9. UPON COMPLETION OF CONSTRUCTION, THE DRAINAGE AND SEWER INFRASTRUCTURES SHALL BE CLEANED OF ALL DEBRIS AND SEDIMENT.
10. PROTECTION OF SUBGRADE: THE CONTRACTOR SHALL BE REQUIRED TO MAINTAIN STABLE, DEWATERED SUBGRADES FOR FOUNDATIONS, PAVEMENT AREAS, UTILITY TRENCHES, AND OTHER AREAS DURING CONSTRUCTION. SUBGRADE DISTURBANCE MAY BE INFLUENCED BY EXCAVATION METHODS, MOISTURE, PRECIPITATION, GROUNDWATER CONTROL, AND CONSTRUCTION ACTIVITIES. THE CONTRACTOR SHALL TAKE PRECAUTIONS TO PREVENT SUBGRADE DISTURBANCE. SUCH PRECAUTIONS MAY INCLUDE DIVERTING STORMWATER RUNOFF AWAY FROM CONSTRUCTION AREAS, REDUCING TRAFFIC IN SENSITIVE AREAS, AND MAINTAINING AN EFFECTIVE DEWATERING PROGRAM. SOILS EXHIBITING HEAVING OR INSTABILITY SHALL BE OVER EXCAVATED TO MORE COMPETENT BEARING SOIL AND REPLACED WITH FREE DRAINING STRUCTURAL FILL.
11. IF THE EARTHWORK IS PERFORMED DURING FREEZING WEATHER, EXPOSED SUBGRADES ARE SUSCEPTIBLE TO FROST. NO FILL OR UTILITIES SHALL BE PLACED ON FROZEN GROUND. THIS WILL LIKELY REQUIRE REMOVAL OF A FROZEN SOIL CRUST AT THE COMMENCEMENT OF EACH DAY'S OPERATION. THE FINAL SUBGRADE ELEVATION WOULD ALSO REQUIRE AN APPROPRIATE DEGREE OF INSULATION AGAINST FREEZING.
12. THE PROJECT AREA IS OUTSIDE THE 100-YEAR FLOOD ZONE. EXCAVATED MATERIAL NOT USED AS FILL MATERIAL ON SITE, SHALL ONLY BE PLACED IN UPLANDS AREA OUTSIDE OF THE 100 YEAR FLOOD ZONE.
13. PLACEMENT OF BORROW MATERIALS SHALL BE PERFORMED IN A MANNER THAT PREVENTS LONG TERM DIFFERENTIAL SETTLEMENT. EXCESSIVELY WET MATERIALS SHALL BE STOCKPILED AND ALLOWED TO DRAIN BEFORE PLACEMENT. FROZEN MATERIAL SHALL NOT BE USED FOR CONSTRUCTION. VOIDS BETWEEN STONES AND CLUMPS OF MATERIAL SHALL BE FILLED WITH FINE MATERIALS.
14. ALL DISTURBED AREAS NOT TO BE PAVED OR OTHERWISE TREATED SHALL RECEIVE SIX (6") INCHES OF LOAM, LIMESTONE, FERTILIZER, SEED, MULCH, AND APPROPRIATE SOIL STABILIZATION TECHNIQUES.
15. CONTRACTOR TO ESTABLISH AND MAINTAIN TEMPORARY BENCHMARKS (TBMS) AND PERFORM CONSTRUCTION SURVEY LAYOUT.
16. THE LOCATION OF EXISTING UNDERGROUND UTILITIES IS APPROXIMATE AND THE LOCATIONS ARE NOT GUARANTEED BY THE ENGINEER, SURVEYOR, OR OWNER. IT IS THE CONTRACTOR'S RESPONSIBILITY TO LOCATE ALL UTILITIES, ANTICIPATE CONFLICTS, REPAIR DAMAGE TO EXISTING UTILITIES, AND RELOCATE EXISTING UTILITIES AT NO EXTRA COST TO THE OWNER.
17. CONTRACTOR SHALL MAINTAIN AND PROVIDE RECORD DRAWINGS TO RIVERWOODS AND TO THE TOWN OF DURHAM.
18. CONTRACTOR SHALL CONTROL DUST BY SPRAYING WATER, SWEEPING PAVED SURFACES AND VEGETATION AND/OR MULCHING STOCKPILES.
19. ALL OUTSIDE CONSTRUCTION ACTIVITY IS RESTRICTED TO THE HOURS OF 7AM TO 6PM MONDAY THROUGH FRIDAY AND 8AM TO 6PM SATURDAY. BLASTING, CHIPPING OF STONE OR USE OF ROCK HAMMERS IS RESTRICTED TO THE THE HOURS OF 9AM TO 4PM MONDAY THROUGH FRIDAY. ACTIVITY OUTSIDE OF THESE HOURS FOR SPECIAL SITUATIONS MAY BE APPROVED BY THE BUILDING OFFICIAL IN CONSULTATION WITH OTHER TOWN STAFF.
20. FILL SPACED WITHIN 3 FEET OF THE OUTSIDE OF FOUNDATION WALLS SHALL CONSIST OF STRUCTURAL FILL, UNLESS OTHERWISE INDICATED ON THE DRAWINGS.
21. ALL ENTRANCE SLABS AND SIDEWALKS WITHIN 5 FEET OF THE BUILDING SHALL HAVE 4 FEET DEPTH OF STRUCTURAL FILL. TRANSITION FILL TO TYPICAL SIDEWALK DEPTH AT 2:1 SLOPE.
22. IT IS THE APPLICANT'S, SITE CONTRACTOR'S, AND BUILDING CONTRACTOR'S RESPONSIBILITY TO FOLLOW ALL REQUIREMENTS TO THIS SITE PLAN APPROVAL. PLEASE REVIEW THESE PLANS AND THE PLANNING BOARD NOTICE OF DECISION CAREFULLY. CONTACT THE DURHAM PLANNING DEPARTMENT AT (603) 868-8064 WITH ANY QUESTIONS OF CONCERNS.
23. STORM DRAIN INLET PROTECTION DEVICES SHALL BE INSTALL AT EACH CATCH BASIN, DROP INLET OR AREA DRAIN UPON INSTALLATION OF STRUCTURE.
24. BEST MANAGEMENT PRACTICES SHALL BE FOLLOWED FOR THE PROTECTION OF EXISTING TREES AND VEGETATION THAT TO BE PRESERVED (PER APPENDIX A IN ARTICLE 5 OF DURHAM'S SITE PLAN REGULATIONS.
    a. INSTALL HIGHLY VISIBLE AND STURDY FENCING TO KEEP EQUIPMENT OFF OF THE CRITICAL ROOTING ZONE OF TREES IDENTIFIED TO PROTECT. FENCING OR CONCRETE BARRIERS SHALL BE INSTALLED AROUND ALL WOODED AREAS AND INDIVIDUAL TREES WHERE EQUIPMENT MAY BE PRESENT.
    b. WHERE CONSTRUCTION MUST COME CLOSE TO LARGE TREES: WRAP TRUNK IN WOODEN SNOW FENCING OR PLACE CONCRETE BARRIER TO PROTECT TREE; AND PLACE A HEAVY LAYER OF WOOD CHIPS (6"), HEAVY TIMBERS OR VEHICLE MATS OVER THE ROOT ZONE WHERE EQUIPMENT WILL PASS.
    c. ESTABLISH AND IDENTIFY TRAVEL LANES, PARKING AREAS, UNLOADING AREAS, WASHOUT AND STORAGE AREAS TO KEEP VEHICLES, EQUIPMENT AND CHEMICALS AWAY FROM TREE ROOT ZONES.
    d. WHERE GRADING OR EXCAVATION WILL DAMAGE ROOTS, SEVERING ROOTS CLEANLY BY HAND OR WITH POWER EQUIPMENT (CONCRETE SAW) CAUSES LESS TREE DAMAGE THEN TEARING THROUGH THE ROOT SYSTEM WITH HEAVY EQUIPMENT.
    e. FILL AND GRADING SHALL BE PLANNED SO AS NOT TO CHANGE THE DRAINAGE OR SOIL MOISTURE LEVEL IN THE ROOT ZONE AREA. IN CHANGING GRADE, DO NOT ADD MORE THAN 4-6 INCHES OF FILL SOIL OVER THE CRITICAL ROOT ZONE. THIS FILL WILL AFFECT THE AMOUNT OF MOISTURE AND OXYGEN REACHING THE ROOT ZONE.
    f. PRUNE ANY LOW HANGING BRANCHES THAT ARE LIKELY TO BE BROKEN OFF BY EQUIPMENT.
    g. CONDUCT CONSTRUCTION DURING THE WINTER OR DORMANT SEASON, WHEN STRESS TO TREES WILL BE LESS, AND THERE IS LESS SOIL COMPACTION AND DISTURBANCE ON FROZEN GROUND.
    h. MULCH AND IRRIGATE IMPACTED TREES AS NEEDED IF CONSTRUCTION OCCURS DURING THE GROWING SEASON.

GRADING NOTES:

1. WHERE PROPOSED GRADES MEET EXISTING GRADES, CONTRACTOR SHALL BLEND GRADES TO PROVIDE A SMOOTH TRANSITION BETWEEN EXISTING AND NEW WORK. PONDING AT TRANSITION AREAS WILL NOT BE ACCEPTED. ABRUPT RIDGES AT TOPS AND BOTTOM WILL NOT BE ACCEPTED.
2. CONTRACTOR SHALL MAINTAIN POSITIVE DRAINAGE AWAY FROM ALL BUILDING FOUNDATIONS, STRUCTURES AND PLANTING BEDS.
3. MAXIMUM SLOPE IN DISTURBED AREAS SHALL BE NO STEEPER THAN 3:1 (h:v), UNLESS OTHERWISE NOTED. WHERE SLOPES IN DISTURBED AREAS ARE STEEPER THAN 3:1, CONTRACTOR SHALL PROVIDE CURLEX II EROSION CONTROL BLANKET FROM AMERICAN EXCELSIOR COMPANY (800) 777-7645 OR APPROVED EQUAL UNLESS OTHERWISE NOTED.
4. CONTRACTOR SHALL ADJUST UTILITY ELEMENTS MEANT TO BE FLUSH WITH GRADE (CLEANOUTS, UTILITY MANHOLES, CATCH BASINS, INLETS, ETC.) THAT IS AFFECTED BY SITE WORK OR GRADE CHANGES, WHETHER SPECIFICALLY NOTED ON PLANS OR NOT.
5. CROSS SLOPES AT ALL WALKS SHALL BE PITCHED TO DRAIN 1 1/2% MINIMUM 2% MAXIMUM.
6. PITCH ALL WALKS AND PATIOS AWAY FROM BUILDINGS AT 1-1/2% MINIMUM; PITCH WITHIN 5 FEET OF STAIRS OR DOORS SHALL NOT EXCEED 2%.
7. CONTRACTOR SHALL PROVIDE A FINISH PAVEMENT SURFACE FREE OF LOW SPOTS AND PONDING AREAS.
8. ALL UNSUITABLE MATERIALS AND SURPLUS MATERIALS WHICH CAN NOT BE APPROPRIATELY WASTED ON SITE SHALL BE REMOVED AT NO ADDITIONAL COST TO THE OWNER.
9. THE GRADING ON THE PLANS SHOWS THE GENERAL INTENT AND DIRECTION OF THE STORMWATER FLOW. CONTRACTOR SHALL NOTIFY THE ENGINEER IMMEDIATELY OF ANY FIELD CONDITIONS THAT WILL IMPACT THE GRADING DESIGN SHOWN ON THIS PLAN FOR RESOLUTION.
10. SAWCUT AND REMOVE EXISTING PAVEMENT ONE FOOT OFF PROPOSED EDGE OF PAVEMENT OR CURB LINE IN ALL AREAS WHERE NEW PAVEMENT OR CURBING ABUTS EXISTING PAVEMENT.

UTILITY NOTES:

1. COORDINATE UTILITY WORK WITH UTILITY COMPANIES.
2. ALL ELECTRIC, CABLE, AND TELECOMMUNICATION SERVICES AND CONDUITS SHALL BE LOCATED UNDERGROUND WHERE SHOWN. UNDERGROUND UTILITIES INSTALLATIONS SHALL MEET THE MINIMUM REQUIREMENTS OF TOWN OF DURHAM AND UTILITY COMPANIES. ALL UNDERGROUND CONDUITS SHALL HAVE NYLON PULL ROPES TO FACILITATE PULLING IN CABLES.
3. CONTRACTOR SHALL VERIFY THE EXACT LOCATION & ELEVATIONS OF ALL EXISTING UTILITIES PRIOR TO COMMENCING CONSTRUCTION. ANY DISCREPANCIES BETWEEN FIELD AND PLAN SHALL BE IMMEDIATELY REPORTED TO ENGINEER.
4. ALL SEWER, DRAINAGE AND WATER INSTALLATIONS SHALL CONFORM TO THE MINIMUM REQUIREMENTS OF THE DURHAM PUBLIC WORKS DEPARTMENT AND THE NHDES. THE MORE STRINGENT SPECIFICATION SHALL GOVERN.
5. SEE ELECTRICAL SITE PLAN FOR TYPICAL ELECTRIC/COMMUNICATION CONDUIT TRENCH SECTION.
6. VERIFY LOCATION OF UTILITY BOXES WITH OWNER AND UTILITY COMPANIES.
7. ALL UTILITY STRUCTURES SHALL BE SET FLUSH WITH PROPOSED GRADE.

GENERAL NOTES:

1. ROUTE 4 BUFFER. IN THE EVENT THAT NHDOT REMOVES A SIGNIFICANT PORTION OF THE TREE BUFFER ON THE SOUTHERLY SIDE OF THE SITE, ADJACENT TO THE WESTBOUND EXIT RAMP OF ROUTE 4, THEN THE PLANNING BOARD SHALL MAKE A DETERMINATION AS TO WHETHER THE PROJECT BUILDING AND/OR RETAINING WALL IS SIGNIFICANTLY MORE VISIBLE. IF THE PLANNING BOARD MAKES SUCH A DETERMINATION, THEN THE APPLICANT WILL SUBMIT AN EVERGREEN PLANTING PLAN FOR THE AREA BETWEEN THE FACE OF THE RETAINING WALL AND THE NHDOT BOUNDARY FOR THE PURPOSE OF CREATING A TREE BUFFER WHICH WILL BE SIMILAR, BUT NOT NECESSARILY IDENTICAL, TO THAT WHICH EXISTING PRIOR TO WHEN NHDOT REMOVED THE TREES. BASELINE PHOTOS, SHOWING THE TREE BUFFER, ONCE CONSTRUCTION IS COMPLETE, WILL BE ATTACHED TO THESE CONDITIONS OF APPROVAL AS PART OF THE AS-BUILT PACKAGE. ADDITIONAL PHOTOS MAY BE PROVIDED BY THE APPLICANT TO SHOW THE TREE BUFFER IMMEDIATELY PRIOR TO THE NHDOT CUT. THE PLANNING BOARD SHALL THEN REVIEW THE PLANTING PLAN AND MAY ACCEPT COMMENTS FROM THE TREE WARDEN AND THE PUBLIC ALTHOUGH NO PUBLIC HEARING WILL BE REQUIRED. THE APPLICANT SHALL BE REQUIRED TO INSTALL, AT ITS OWN EXPENSE, THE EVERGREEN PLANTING PLAN APPROVED BY THE PLANNING BOARD. PLANNING BOARD APPROVAL OF THE PLAN SHALL NOT BE UNREASONABLY WITHHELD.
2. SNOW REMOVAL. ALL EXCESS SNOW THAT CANNOT BE PROPERLY STORED ON SITE SHALL BE REMOVED FROM THE SITE.

FINAL APPROVAL BY DURHAM PLANNING BOARD.
CERTIFIED BY MICHAEL BEHRENDT, TOWN PLANNER
CERTIFIED _____
DATE _____

P4836

ALTUS ENGINEERING, INC.
133 COURT STREET PORTSMOUTH, NH 03801
VOICE: (603) 433-2335
FAX: (603) 433-4194

STATE OF NEW HAMPSHIRE — JEFFREY K. CLIFFORD No. 6524 — LICENSED PROFESSIONAL ENGINEER

ISSUED FOR: FINAL TOWN APPROVAL

ISSUE DATE: MAY 23, 2018

REVISIONS

NO.	DESCRIPTION	BY	DATE
0	INITIAL SUBMISSION	JKC	7/19/17
1	PB RE-SUBMISSION	JKC	10/16/17
2	PB RE-SUBMISSION	JKC	12/05/17
3	100% D.D.	JKC	12/22/17
4	NHDES AoT SUBMISSION	JKC	1/18/18
5	50% C.D.	JKC	2/16/18
6	PERMIT SET	JKC	3/16/18
7	BID SET	JKC	4/02/18
8	100% C.D.	JKC	4/13/18
9	FINAL TOWN APPROVAL	JKC	5/23/18

DRAWN BY: RMB
APPROVED BY: JKC
DRAWING FILE: 4836SITE.DWG

SCALE: N.T.S.

LAND OWNER – SUBJECT PARCEL:
RIVERWOODS DURHAM
5 WHITE OAK DRIVE
EXETER, NH 03833

APPLICANT:
THE RIVERWOODS GROUP
5 WHITE OAK DRIVE
EXETER, NH 03833

PROJECT:
RIVERWOODS DURHAM
STONE QUARRY DRIVE
DURHAM, NH

TITLE:
GENERAL NOTES & LEGEND

SHEET NUMBER:
G - 1.1

MAP UNIT NO.	SOIL TAXONOMIC NAME	SLOPE	HYDROLOGICAL SOIL GROUP
134A VP	Maybid	0-8%	D
174B/RK	Hollis Charlton Complex	0-8%	B, C, and D
174C/RK	Hollis Charlton Complex	8-15%	B, C, and D
174D/RK	Hollis Charlton Complex	15-25%	B
176B/RK	Hollis Charlton Rock Outcrop Complex	0-8%	B
176C/RK	Hollis Charlton Rock Outcrop Complex	8-15%	B
176D/RK	Hollis Charlton Rock Outcrop Complex	15-25%	B
29B	Woodbridge	0-8%	C
29C	Woodbridge	8-15%	C
29D	Woodbridge	15-25%	C
32B	Boxford	0-8%	D
32C	Boxford	8-15%	D
32D	Boxford	15-25%	D
32E	Boxford	25-50%	D
33A P	Scitico	0-8%	C
38B	Eldridge	0-8%	C
38C	Eldridge	8-15%	C
38D	Eldridge	15-25%	C
299A/aaaaa	Udorthents, Smoothed	0-8%	A
299D/aaaaa	Udorthents	15-25%	A
299B/dfccc	Udorthents Smoothed	0-8%	C
299D/dfccc	Udorthents Smoothed	15-25%	C
600A/efccd	Endoaquents, loamy	0-3%	D

NOTE:

1. SITE SPECIFIC SOIL MAP WAS PREPARED BY JAMES H. LONG OF GZA GEOENVIRONMENTAL, INC. ON APRIL 24 & 26, 2017 USING SSSNNE SPECIAL PUBLICATION NO.3 "SITE SPECIFIC SOIL MAPPING STANDARDS FOR NEW HAMPSHIRE AND VERMONT VERSION 4, DATED FEBRUARY 2011"
2. WETLAND DELINEATED BY JAMES H. LONG AND SURVEYED BY ATLANTIC SURVEY COMPANY IN 2000. JAMES H. LONG VERIFIED WETLAND LIMITS APRIL AND NOVEMBER 2017.

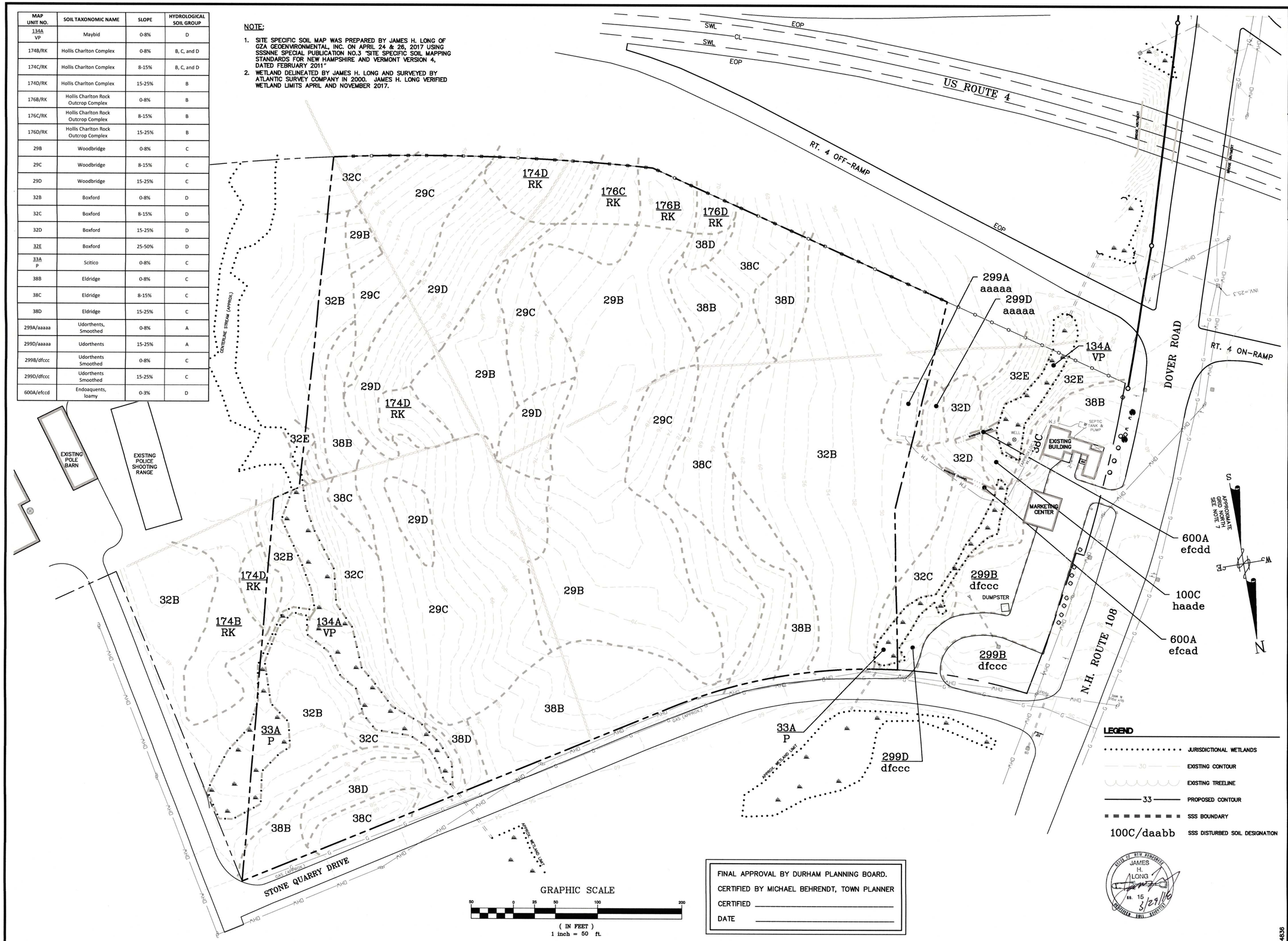

GRAPHIC SCALE

50 0 25 50 100 200

(IN FEET)
1 inch = 50 ft.

FINAL APPROVAL BY DURHAM PLANNING BOARD.
CERTIFIED BY MICHAEL BEHRENDT, TOWN PLANNER
CERTIFIED _____
DATE _____

LEGEND

- JURISDICTIONAL WETLANDS
- 30 EXISTING CONTOUR
- EXISTING TREELINE
- 33 PROPOSED CONTOUR
- SSS BOUNDARY
- 100C/daabb SSS DISTURBED SOIL DESIGNATION

STATE OF NEW HAMPSHIRE JAMES H. LONG No. 15 3/29/18 CERTIFIED SOIL SCIENTIST

ALTUS ENGINEERING, INC.
133 COURT STREET PORTSMOUTH, NH 03801
VOICE: (603) 433-2335
FAX: (603) 433-4194

GZA GeoEnvironmental, Inc.
5 Commerce Park North
Bedford, New Hampshire 03110
Tel. (603) 232-8739

ISSUED FOR: APPROVAL

ISSUE DATE: APRIL 2, 2018

REVISIONS

NO.	DESCRIPTION	BY	DATE
0	INITIAL SUBMISSION	JKC	7/19/17
1	PB RE-SUBMISSION	JKC	10/16/17
2	PB RE-SUBMISSION	JKC	12/05/17
3	100% D.D.	JKC	12/22/17
4	NHDES AoT SUBMISSION	JKC	1/10/18
5	50% C.D.	JKC	2/16/18
6	PERMIT SET	JKC	3/16/18
7	APPROVAL	JKC	4/02/18

DRAWN BY: RMB
APPROVED BY: JKC
DRAWING FILE: 4836SITE.DWG

SCALE: 1 " = 50'

LAND OWNER – SUBJECT PARCEL:

ROCKINGHAM PROPERTIES 1, LTD
P.O. BOX 423
BELMONT, MA 02178

APPLICANT:

THE RIVERWOODS GROUP
5 WHITE OAK DRIVE
EXETER, NH 03833

PROJECT:

RIVERWOODS DURHAM
STONE QUARRY DRIVE
DURHAM, NH

TITLE:

SITE SPECIFIC SOILS MAP

SHEET NUMBER:

G - 2.0

P4836

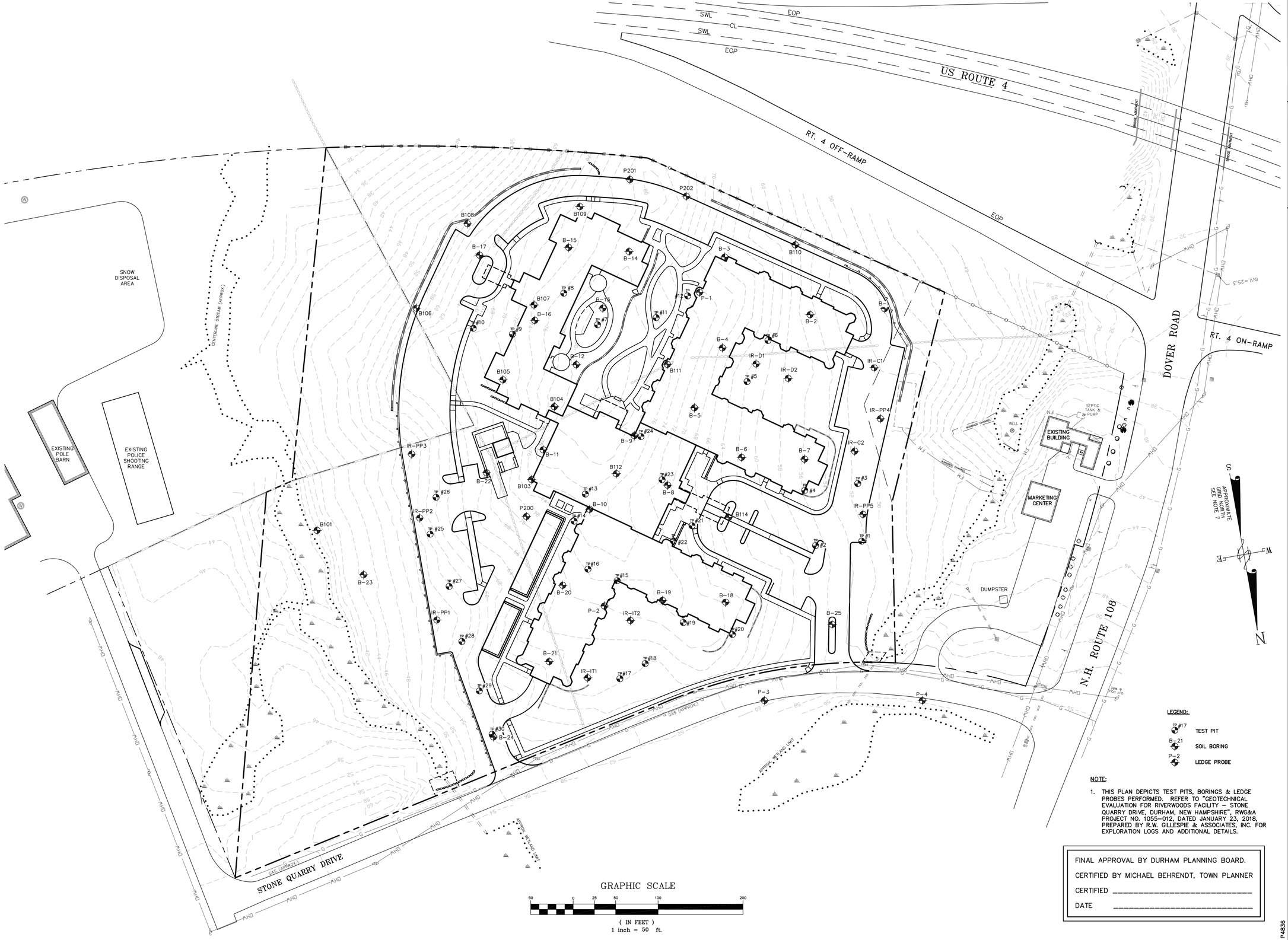

LEGEND:

- TP #17 — TEST PIT
- B-21 — SOIL BORING
- P-2 — LEDGE PROBE

NOTE:

1. THIS PLAN DEPICTS TEST PITS, BORINGS & LEDGE PROBES PERFORMED. REFER TO "GEOTECHNICAL EVALUATION FOR RIVERWOODS FACILITY – STONE QUARRY DRIVE, DURHAM, NEW HAMPSHIRE", RWG&A PROJECT NO. 1055-012, DATED JANUARY 23, 2018, PREPARED BY R.W. GILLESPIE & ASSOCIATES, INC. FOR EXPLORATION LOGS AND ADDITIONAL DETAILS.

FINAL APPROVAL BY DURHAM PLANNING BOARD.
CERTIFIED BY MICHAEL BEHRENDT, TOWN PLANNER
CERTIFIED _____
DATE _____

P4836

ALTUS ENGINEERING, INC.
133 COURT STREET PORTSMOUTH, NH 03801
VOICE: (603) 433-2335
FAX: (603) 433-4194

STATE OF NEW HAMPSHIRE — JEFFREY K. CLIFFORD No. 6524 LICENSED PROFESSIONAL ENGINEER

ISSUED FOR: FINAL TOWN APPROVAL

ISSUE DATE: MAY 23, 2018

REVISIONS

NO.	DESCRIPTION	BY	DATE
0	INITIAL SUBMISSION	JKC	7/19/17
1	PB RE-SUBMISSION	JKC	10/16/17
2	PB RE-SUBMISSION	JKC	12/05/17
3	100% D.D.	JKC	12/22/17
4	NHDES AoT SUBMISSION	JKC	1/18/18
5	50% C.D.	JKC	2/16/18
6	PERMIT SET	JKC	3/16/18
7	BID SET	JKC	4/02/18
8	100% C.D.	JKC	4/13/18
9	FINAL TOWN APPROVAL	JKC	5/23/18

DRAWN BY: RMB
APPROVED BY: JKC
DRAWING FILE: 4836SITE.DWG

SCALE: 1 " = 50'

LAND OWNER – SUBJECT PARCEL:

RIVERWOODS DURHAM
5 WHITE OAK DRIVE
EXETER, NH 03833

APPLICANT:

THE RIVERWOODS GROUP
5 WHITE OAK DRIVE
EXETER, NH 03833

PROJECT:

RIVERWOODS DURHAM
STONE QUARRY DRIVE
DURHAM, NH

TITLE:

GEOTECHNICAL INVESTIGATION PLAN

SHEET NUMBER:

G - 2.1

BEST MANAGEMENT PRACTICES FOR BLASTING

Purpose. The purpose of best management practices for blasting is to minimize the potential for groundwater contamination, to ensure that the groundwater can be used for existing and future drinking water supply sources.

Applicability. This part shall apply to all projects for which an AOT permit is required that will involve blasting of bedrock.

Loading Practices. The following blast hole loading practices shall be implemented:

(a) The driller shall maintain drilling logs to document:
  (1) The depths and lengths of voids, cavities, and fault zones or other weak zones encountered; and
  (2) Groundwater conditions;
(b) The driller shall communicate the contents of the drilling logs directly to the blaster;
(c) Explosive products shall be managed on-site such that they are:
  (1) Used in the borehole;
  (2) Returned to the delivery vehicle; or
  (3) Placed in secure containers for off-site disposal;
(d) Spillage around the borehole shall be:
  (1) Placed in the borehole; or
  (2) Cleaned up and returned to an appropriate vehicle for handling or placement in secured containers for off-site disposal;
(e) Loaded explosives shall be detonated as soon as possible and not left in the blast holes overnight, unless weather or other safety concerns reasonably dictate that detonation should be postponed;
(f) Loading equipment shall be cleaned in an area where wastewater can be properly contained and handled in a manner that prevents release of contaminants to the environment; and
(g) Explosives shall be loaded in accordance with industry standard practices for priming, stemming, decking and column rise to maintain good continuity in the column load to promote complete detonation.

Explosive Selection. Explosive products shall be selected that are:
(a) Appropriate for site conditions and safe blast execution; and
(b) Have the appropriate water resistance for the site conditions present.

Prevention of Misfires. Industry-standard practices shall be implemented to prevent misfires.

Muck and Rock Management.
(a) The following definitions apply:
  (1) "Blasted material" means all of the earth material loosened as a result of the blasting;
  (2) "Muck" means the blasted material remaining after the rocks have been removed; and
  (3) "Rocks" means the larger pieces of blasted material that are separated from the muck for use elsewhere, including for feedstock of a rock crushing operation.
(b) Muck shall be removed from the blast area as soon as reasonably possible.
(c) Rocks shall be managed so as to prevent water supply wells or surface waters from being contaminated by runoff.

Spill Prevention Measures and Spill Mitigation.
(a) Fuel and other regulated substances shall be managed as required by Best Management Practices for Groundwater Protection, Env-Wq 401.04.
(b) Personnel working at the blast site shall be trained in how to respond to a spill of the regulated substances being used at the site.

Fueling and Maintenance of Construction Equipment.
(a) If any construction equipment, including but not limited to earthmoving, excavation, and boring equipment, will be fueled from a tank truck or other container that is moved around the site, the following shall apply:
  (1) Portable containment equipment that is sized to contain the most likely volume of fuel to be spilled during a fuel transfer shall be used, where the most likely volume to be spilled is determined based on the fuel transfer rate, the amount of fuel being transferred, the distance between the hose nozzle and pump shut off switch, and the response time of personnel and equipment available at the facility;
  (2) The containment equipment shall be positioned to catch any fuel spills due to overfilling the equipment and any other spills that might occur at or near the fuel filler port to that equipment;
  (3) The type of containment equipment used and its positioning and use shall account for all of the drip points associated with the fuel filling port and the hose from the fuel delivery truck; and
  (4) Personnel shall not leave the immediate area while fuel is being transferred, to ensure that any spills will be of limited volume.
(b) If the site will have a fixed location for fueling construction equipment, the following shall apply:
  (1) All fuel containers, including but not limited to skid-mounted tanks, drums, and five gallon cans, shall have secondary containment that:
    a. Is capable of containing 110% of the volume of the largest fuel storage container; and
    b. Has an impervious floor;
  (1) Secondary containment for tanks may comprise a metal, plastic, polymer or precast concrete vault providing 110% of the volume of the largest fuel storage container;
  (2) For fuel containers, secondary containment may comprise containment pallets;
  (3) The area where fuel is transferred shall be a flat, impervious area that:
    a. Is adjacent to the fuel container(s); and
    b. Extends beyond the full reach, or length, of the fuel hose; and
  (1) Secondary containment areas may be in the form of a basin that is:
    a. Sloped down to a central low point or bermed along the perimeter;
    b. Lined with a continuous sheet of 20 mil or thicker polymer material or appropriate geomembrane liner; and
    c. Backfilled with at least 6 inches of sand.

GROUNDWATER MONITORING PLAN

IN ACCORDANCE WITH NHDES ALTERATION OF TERRAIN RULES, A GROUNDWATER MONITORING PLAN IS BEING IMPLEMENTED FOR BLASTING ACTIVITIES AT THE BUILDING SITE. THE OWNER WILL ENGAGE A QUALIFIED CONSULTANT TO MONITOR THE FOUR (4) NEIGHBORING WELLS SELECTED BY NHDES. THE BLASTING CONTRACTOR SHALL COORDINATE WITH THE OWNER'S MONITORING CONSULTANT AND PROVIDE 24 HOUR NOTICE OF EACH ANTICIPATED BLASTING EVENT.

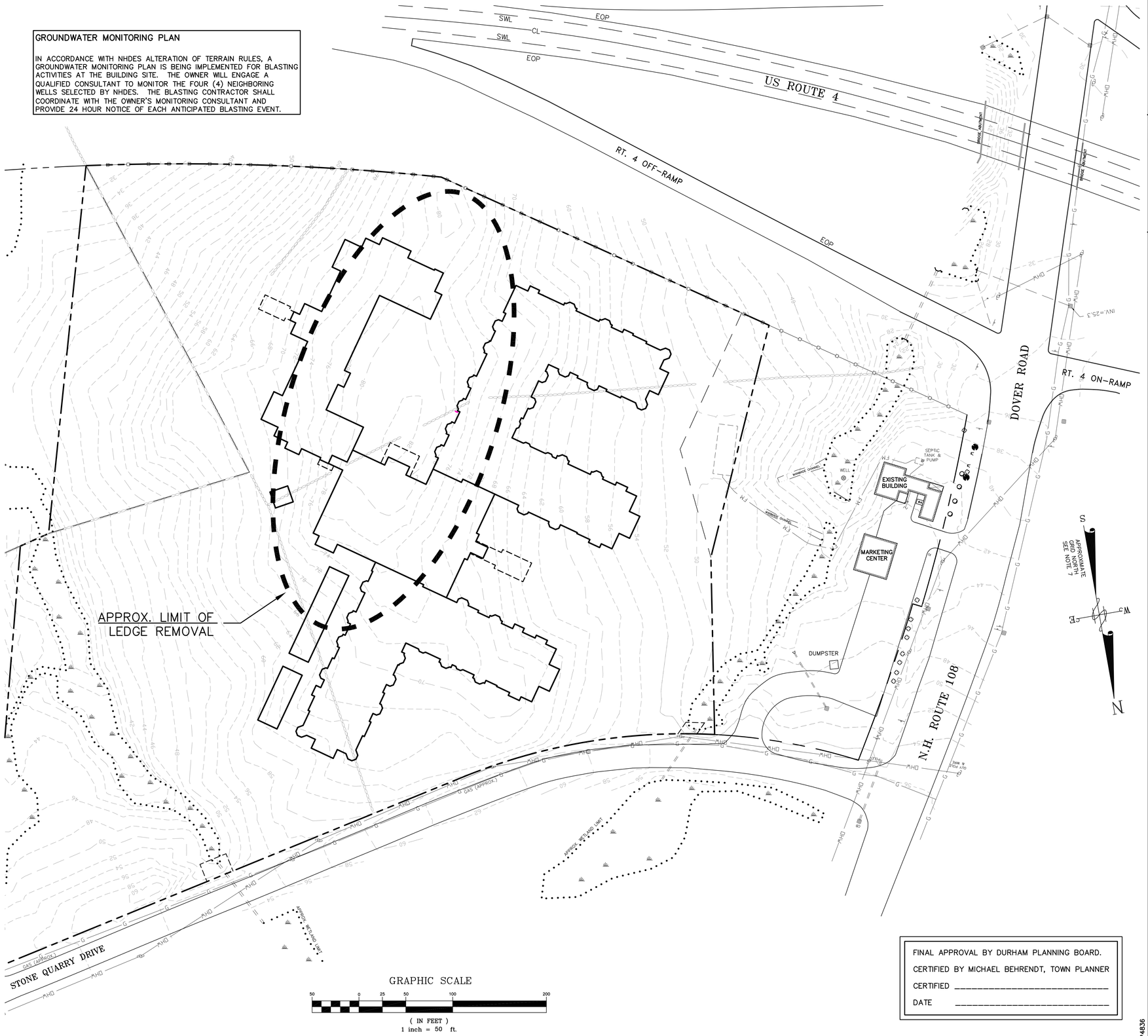

GRAPHIC SCALE

50 0 25 50 100 200

(IN FEET)
1 inch = 50 ft.

FINAL APPROVAL BY DURHAM PLANNING BOARD.
CERTIFIED BY MICHAEL BEHRENDT, TOWN PLANNER
CERTIFIED _____
DATE _____

P4836

ALTUS ENGINEERING, INC.
133 COURT STREET PORTSMOUTH, NH 03801
VOICE: (603) 433-2335
FAX: (603) 433-4194

JEFFREY K. CLIFFORD No. 6524 LICENSED PROFESSIONAL ENGINEER STATE OF NEW HAMPSHIRE

ISSUED FOR: FINAL TOWN APPROVAL

ISSUE DATE: MAY 23, 2018

REVISIONS

NO.	DESCRIPTION	BY	DATE
0	INITIAL SUBMISSION	JKC	12/05/17
1	100% D.D.	JKC	12/22/17
2	NHDES AoT SUBMISSION	JKC	1/18/18
3	50% C.D.	JKC	2/16/18
4	PERMIT SET	JKC	3/16/18
5	BID SET	JKC	4/02/18
6	100% C.D.	JKC	4/13/18
7	FINAL TOWN APPROVAL	JKC	5/23/18

DRAWN BY: RMB
APPROVED BY: JKC
DRAWING FILE: 4836SITE.DWG

SCALE: 1 " = 50'

LAND OWNER – SUBJECT PARCEL:
RIVERWOODS DURHAM
5 WHITE OAK DRIVE
EXETER, NH 03833

APPLICANT:
THE RIVERWOODS GROUP
5 WHITE OAK DRIVE
EXETER, NH 03833

PROJECT:
RIVERWOODS DURHAM
STONE QUARRY DRIVE
DURHAM, NH

TITLE:
BLASTING PLAN – BEST MANAGEMENT PRACTICES

SHEET NUMBER:
G - 2.2

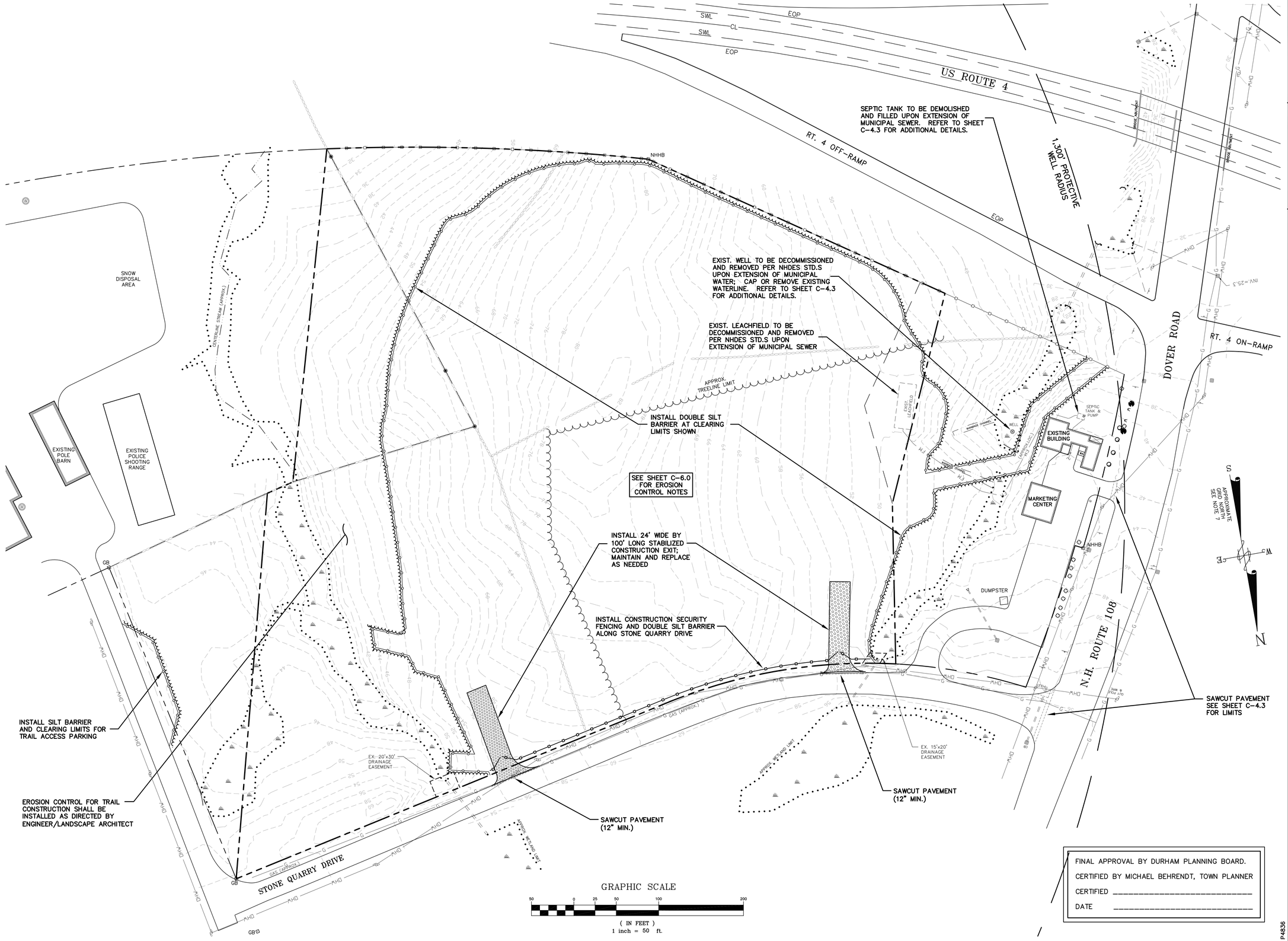

FINAL APPROVAL BY DURHAM PLANNING BOARD.
CERTIFIED BY MICHAEL BEHRENDT, TOWN PLANNER
CERTIFIED _____
DATE _____

P4836

ALTUS ENGINEERING, INC.
133 COURT STREET PORTSMOUTH, NH 03801
VOICE: (603) 433-2335
FAX: (603) 433-4194

STATE OF NEW HAMPSHIRE — JEFFREY K. CLIFFORD No. 6524 LICENSED PROFESSIONAL ENGINEER

ISSUED FOR:
FINAL TOWN APPROVAL

ISSUE DATE:
MAY 23, 2018

REVISIONS

NO.	DESCRIPTION	BY	DATE
0	INITIAL SUBMISSION	JKC	7/19/17
1	PB RE-SUBMISSION	JKC	10/06/17
2	PB RE-SUBMISSION	JKC	12/05/17
3	100% D.D.	JKC	12/22/17
4	NHDES AoT SUBMISSION	JKC	1/18/18
5	50% C.D.	JKC	2/16/18
6	PERMIT SET	JKC	3/16/18
7	BID SET	JKC	4/02/18
8	100% C.D.	JKC	4/13/18
9	FINAL TOWN APPROVAL	JKC	5/23/18

DRAWN BY: RMB
APPROVED BY: JKC
DRAWING FILE: 4836SITE.DWG

SCALE: 1 " = 50'

LAND OWNER – SUBJECT PARCEL:
RIVERWOODS DURHAM
5 WHITE OAK DRIVE
EXETER, NH 03833

APPLICANT:
THE RIVERWOODS GROUP
5 WHITE OAK DRIVE
EXETER, NH 03833

PROJECT:
RIVERWOODS DURHAM
STONE QUARRY DRIVE
DURHAM, NH

TITLE:
SITE PREPARATION PLAN

SHEET NUMBER:
C - 1.0

ZONING SUMMARY:

PROPERTY REFERENCE: MAP 11, LOTS 8-1 THROUGH 8-15 AND VALBETH LANE (SUBJECT PARCELS) AND PORTIONS OF LOT 8-0 AND LOT 12

TOTAL SITE AREA: 491,918 S.F. OR 11.29 AC.

ZONING: OFFICE AND RESEARCH DISTRICT-ROUTE 108 (OR)
WETLANDS CONSERVATION OVERLAY DISTRICT (WCO)

WETLANDS AREA: 16,654 S.F.

	REQ'D	PROVIDED
SETBACKS		
FRONT YARD	50' MIN.	50'
SIDE YARD	25' MIN.	25'
REAR YARD	25' MIN.	9'
WETLANDS BUFFER	75' MIN.	<75' CUP APPROVED
MAX. IMPERVIOUS	50% MAX.	44%
BUILDING HEIGHT:	50'/75' MAX.	SEE ARCH. DWG.S
OVERALL BLDG. FOOTPRINT:		87,897 S.F.

FLOOR AREA:

GROUND FLOOR	67,522 S.F.	
FIRST FLOOR	90,696 S.F.	65 UNITS
SECOND FLOOR	77,744 S.F.	67 UNITS
THIRD FLOOR	72,267 S.F.	55 UNITS (PLUS 1 GUEST SUITE)
FOURTH FLOOR	48,148 S.F.	35 UNITS (PLUS 1 GUEST SUITE)
TOTAL	356,378 S.F.	222 UNITS (PLUS 2 GUEST SUITES)

PARKING:

GARAGE	114 SPACES	(INCL. 3 ADA SPACES)
OUTSIDE	178 SPACES	(INCL. 7 ADA SPACES)
TOTAL	292 SPACES	(10 ADA SPACES, 7 REQUIRED)

NOTES:

1. FOR MORE INFORMATION ABOUT THIS SITE PLAN, OR TO SEE THE COMPLETE PLAN SET, CONTACT TOWN OF DURHAM PLANNING DEPARTMENT, 8 NEWMARKET ROAD, DURHAM, NH 03824. (603) 868-8064.
2. BICYCLE STORAGE – 12 OUTSIDE SPACES AND 28 SPACES INSIDE GARAGE. SEE ARCHITECTURAL PLANS FOR INTERIOR BIKE STORAGE.
3. THE TWO (2) GUEST SUITES ARE NOT PERMANENT DWELLING UNITS.
4. REGULATORY APPROVALS RELATING TO ON-SITE WORK:
   - CONDITIONAL USE PERMIT, DATED JANUARY 10, 2018 (SITE PLAN, L.L.A. & CONDITIONAL USES)
   - PRELIMINARY SITE PLAN APPROVAL, DATED JANUARY 10, 2018
   - TOWN COUNCIL SEWER AND WATER EXTENSION APPROVAL, DATED FEB. 5, 2018
   - CONDITIONAL USE PERMIT, DATED MARCH 14, 2018 (SEWER IN WETLAND BUFFER)
   - NHDES AoT PERMIT: AoT-1399, DATED APRIL 1, 2018
   - NHDOT DRIVEWAY PERMIT #06-133-237, DATED APRIL 16, 2018
   - NHDES SEWER CONNECTION PERMIT #D2018-0404, DATED APRIL 17, 2018
   - TOWN DRIVEWAY PERMIT, DATED APRIL 17, 2018
   - NHDES SHORELAND IMPACT PERMIT #2018-00968, DATED APRIL 27, 2018
   - NHDES WETLANDS AND NON-SITE SPECIFIC PERMIT #2018-00607, DATED MAY 16, 2018
   - NHDOT EXCAVATION PERMIT, DATED _____

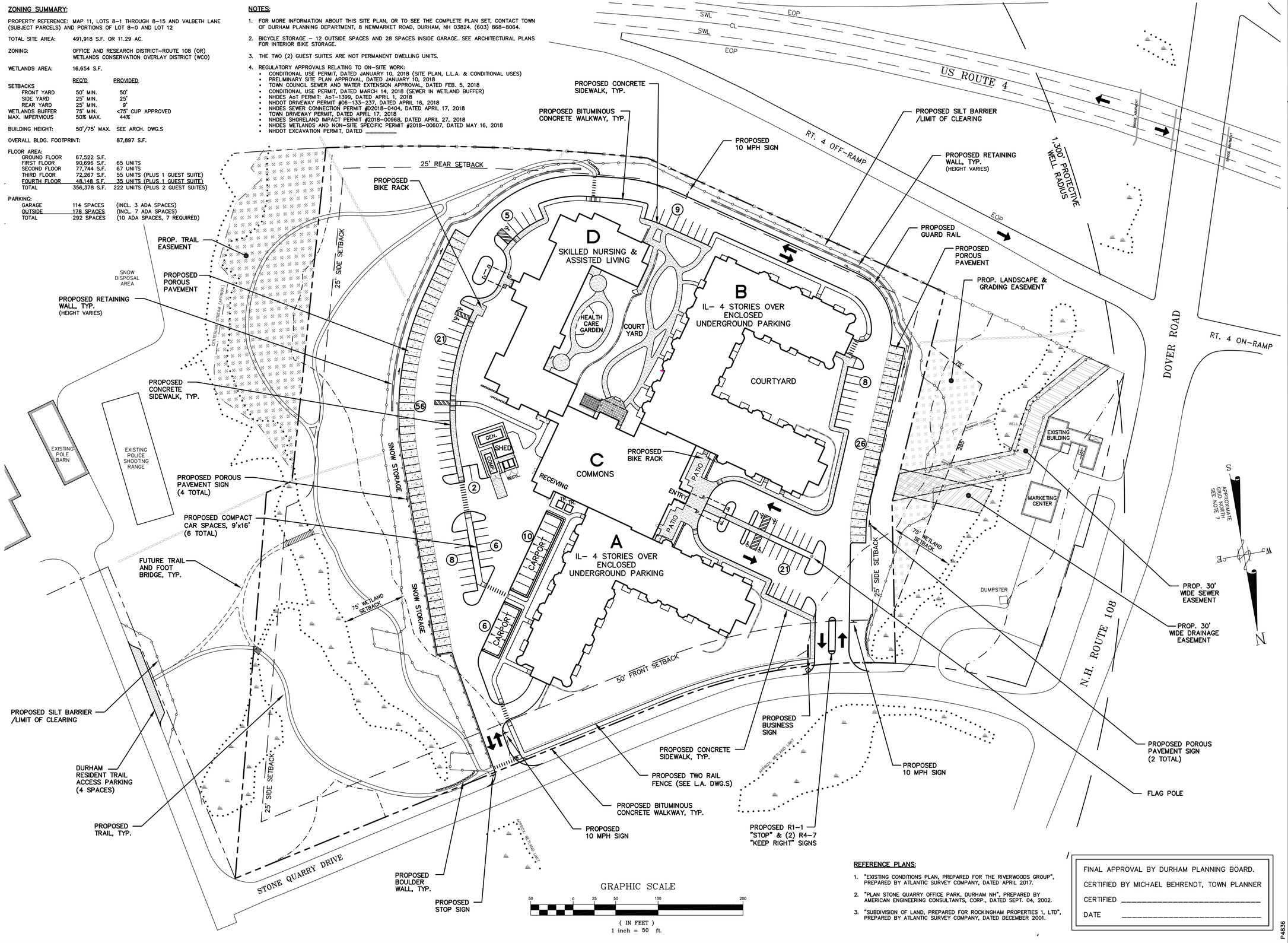

GRAPHIC SCALE

50 0 25 50 100 200

(IN FEET)
1 inch = 50 ft.

REFERENCE PLANS:

1. "EXISTING CONDITIONS PLAN, PREPARED FOR THE RIVERWOODS GROUP", PREPARED BY ATLANTIC SURVEY COMPANY, DATED APRIL 2017.
2. "PLAN STONE QUARRY OFFICE PARK, DURHAM NH", PREPARED BY AMERICAN ENGINEERING CONSULTANTS, CORP., DATED SEPT. 04, 2002.
3. "SUBDIVISION OF LAND, PREPARED FOR ROCKINGHAM PROPERTIES 1, LTD", PREPARED BY ATLANTIC SURVEY COMPANY, DATED DECEMBER 2001.

FINAL APPROVAL BY DURHAM PLANNING BOARD.
CERTIFIED BY MICHAEL BEHRENDT, TOWN PLANNER
CERTIFIED _____
DATE _____

P4836

ALTUS ENGINEERING, INC.
133 COURT STREET PORTSMOUTH, NH 03801
VOICE: (603) 433-2335
FAX: (603) 433-4194

STATE OF NEW HAMPSHIRE – JEFFREY K. CLIFFORD No. 6524 – LICENSED PROFESSIONAL ENGINEER

ISSUED FOR: FINAL TOWN APPROVAL

ISSUE DATE: MAY 23, 2018

REVISIONS

NO.	DESCRIPTION	BY	DATE
0	INITIAL SUBMISSION	JKC	7/19/17
1	PB RE-SUBMISSION	JKC	9/25/17
2	PB RE-SUBMISSION	JKC	10/06/17
3	PB RE-SUBMISSION	JKC	10/16/17
4	FOR REVIEW	JKC	11/10/17
5	50% C.D.	JKC	11/20/17
6	PB RE-SUBMISSION	JKC	12/05/17
7	100% D.D.	JKC	12/22/17
8	NHDES AoT SUBMISSION	JKC	1/18/18
9	PB RE-SUBMISSION	JKC	2/16/18
10	PERMIT SET	JKC	3/16/18
11	BID SET	JKC	4/02/18
12	100% C.D.	JKC	4/13/18
1	ADDENDUM 1	JKC	4/24/18
14	FINAL TOWN APPROVAL	JKC	5/23/18

DRAWN BY: RMB
APPROVED BY: JKC
DRAWING FILE: 4836SITE.DWG

SCALE: 1 " = 50'

LAND OWNER – SUBJECT PARCEL:

RIVERWOODS DURHAM
5 WHITE OAK DRIVE
EXETER, NH 03833

APPLICANT:

THE RIVERWOODS GROUP
5 WHITE OAK DRIVE
EXETER, NH 03833

PROJECT:

RIVERWOODS DURHAM
STONE QUARRY DRIVE
DURHAM, NH

TITLE:

SITE PLAN

SHEET NUMBER:

C - 2.0

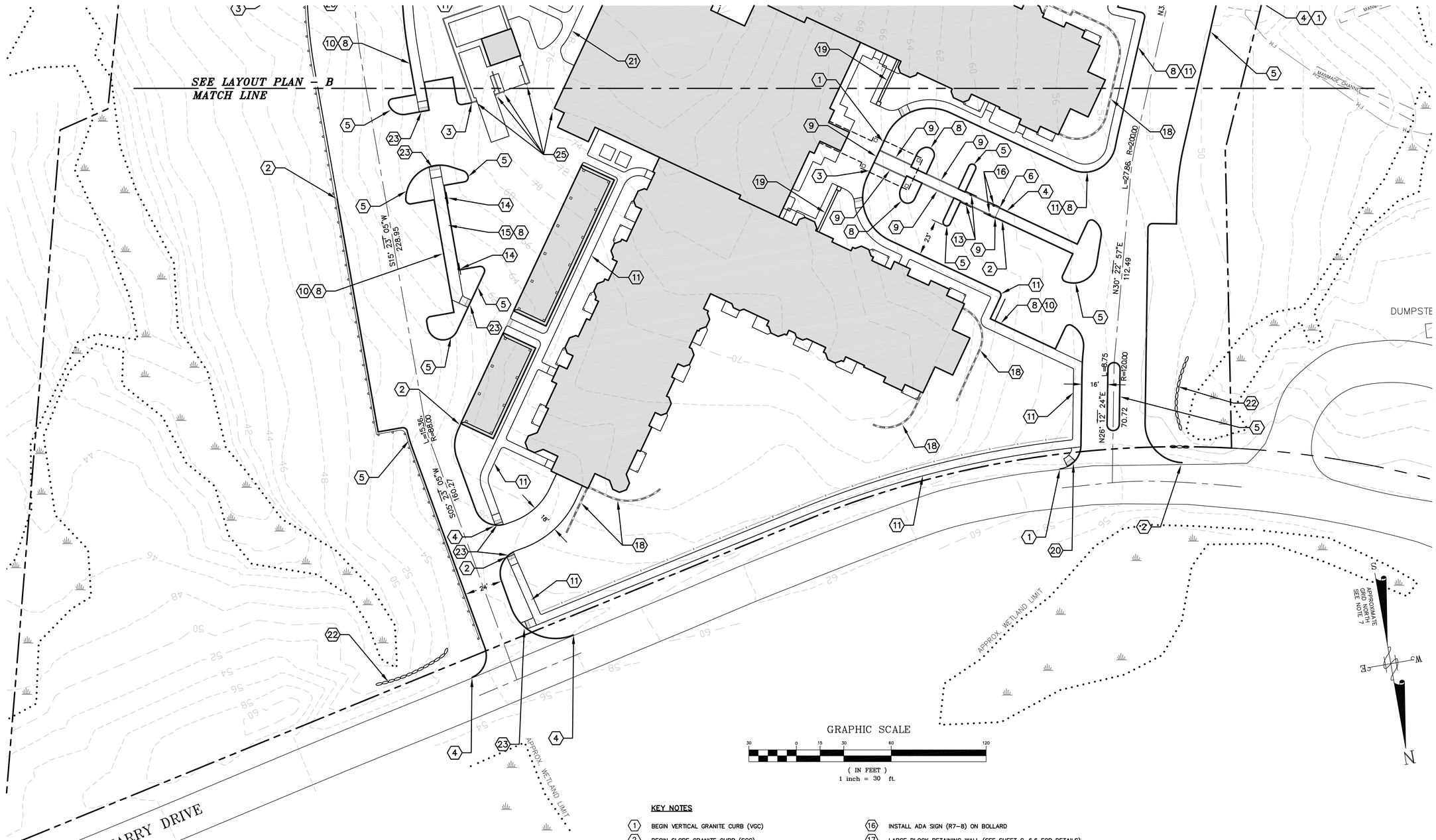

KEY NOTES

1. BEGIN VERTICAL GRANITE CURB (VGC)
2. BEGIN SLOPE GRANITE CURB (SGC)
3. END VERTICAL GRANITE CURB (VGC)
4. END SLOPE GRANITE CURB (SGC)
5. INSTALL SLOPE GRANITE CURB (SGC)
6. BEGIN FLUSH VERTICAL GRANITE CURB
7. END FLUSH VERTICAL GRANITE CURB
8. INSTALL VERTICAL GRANITE CURB
9. INSTALL FLUSH VERTICAL GRANITE CURB
10. INSTALL 6'–WIDE SIDEWALK AT PARKING STALLS
11. INSTALL 5'–WIDE (MIN.) SIDEWALK OR WALKWAY, TYP.
12. INSTALL ADA SIGN (R7–8)
13. INSTALL VAN ADA SIGN (R7–8A) ON BOLLARD
14. INSTALL "COMPACT CAR ONLY" SIGN
15. INSTALL 7'–WIDE SIDEWALK AT PARKING STALLS
16. INSTALL ADA SIGN (R7–8) ON BOLLARD
17. LARGE BLOCK RETAINING WALL (SEE SHEET C–6.6 FOR DETAILS)
18. SEGMENTED BLOCK WALL (SEE L.A. DWG.S & SHEET L–7)
19. 18" HIGH STONE SEAT WALL (SEE L.A. DWG.S & SHEET L–7)
20. CURB CUT TYPE A WITH TRUNCATED DOME DETECTABLE WARNING PLATE
21. INSTALL 6'–WIDE SIDEWALK
22. INSTALL BOULDER WALL (SEE L.A. DWG.S & SHEET L–8)
23. CURB CUT TYPE C WITH TRUNCATED DOME DETECTABLE WARNING PLATE
24. CURB CUT TYPE D WITH TRUNCATED DOME DETECTABLE WARNING PLATE
25. INSTALL BOLLARD

FINAL APPROVAL BY DURHAM PLANNING BOARD.
CERTIFIED BY MICHAEL BEHRENDT, TOWN PLANNER
CERTIFIED _____
DATE _____

P4836

ALTUS ENGINEERING, INC.
133 COURT STREET PORTSMOUTH, NH 03801
VOICE: (603) 433–2335
FAX: (603) 433–4194

STATE OF NEW HAMPSHIRE
JEFFREY K. CLIFFORD
No. 6524
LICENSED PROFESSIONAL ENGINEER

ISSUED FOR:
FINAL TOWN APPROVAL

ISSUE DATE:
MAY 23, 2018

REVISIONS

NO.	DESCRIPTION	BY	DATE
0	INITIAL SUBMISSION	JKC	10/16/17
1	PB RE–SUBMISSION	JKC	12/05/17
2	100% D.D.	JKC	12/22/17
3	NHDES AoT SUBMISSION	JKC	1/18/18
4	50% C.D.	JKC	2/16/18
5	PERMIT SET	JKC	3/16/18
6	BID SET	JKC	4/02/18
7	100% C.D.	JKC	4/13/18
8	FINAL TOWN APPROVAL	JKC	5/23/18

DRAWN BY: RMB
APPROVED BY: JKC
DRAWING FILE: 4836SITE.DWG

SCALE: 1 " = 30'

LAND OWNER – SUBJECT PARCEL:
RIVERWOODS DURHAM
5 WHITE OAK DRIVE
EXETER, NH 03833

APPLICANT:
THE RIVERWOODS GROUP
5 WHITE OAK DRIVE
EXETER, NH 03833

PROJECT:
RIVERWOODS DURHAM
STONE QUARRY DRIVE
DURHAM, NH

TITLE:
LAYOUT
PLAN – A

SHEET NUMBER:
C - 3.0

KEY NOTES

1. BEGIN VERTICAL GRANITE CURB (VGC)
2. BEGIN SLOPE GRANITE CURB (SGC)
3. END VERTICAL GRANITE CURB (VGC)
4. END SLOPE GRANITE CURB (SGC)
5. INSTALL SLOPE GRANITE CURB (SGC)
6. BEGIN FLUSH VERTICAL GRANITE CURB
7. END FLUSH VERTICAL GRANITE CURB
8. INSTALL VERTICAL GRANITE CURB
9. INSTALL FLUSH VERTICAL GRANITE CURB
10. INSTALL 6'-WIDE SIDEWALK AT PARKING STALLS
11. INSTALL 5'-WIDE (MIN.) SIDEWALK OR WALKWAY, TYP.
12. INSTALL ADA SIGN (R7-8)
13. INSTALL VAN ADA SIGN (R7-8A) ON BOLLARD
14. INSTALL "COMPACT CAR ONLY" SIGN
15. INSTALL 7'-WIDE SIDEWALK AT PARKING STALLS
16. INSTALL ADA SIGN (R7-8) ON BOLLARD
17. LARGE BLOCK RETAINING WALL (SEE SHEET C-6.6 FOR DETAILS)
18. SEGMENTED BLOCK WALL (SEE L.A. DWG.S & SHEET L-7)
19. 18" HIGH STONE SEAT WALL (SEE L.A. DWG.S & SHEET L-7)
20. CURB CUT TYPE A WITH TRUNCATED DOME DETECTABLE WARNING PLATE
21. INSTALL 6'-WIDE SIDEWALK
22. INSTALL BOULDER WALL (SEE L.A. DWG.S & SHEET L-8)
23. CURB CUT TYPE C WITH TRUNCATED DOME DETECTABLE WARNING PLATE
24. CURB CUT TYPE D WITH TRUNCATED DOME DETECTABLE WARNING PLATE
25. INSTALL BOLLARD

FINAL APPROVAL BY DURHAM PLANNING BOARD.
CERTIFIED BY MICHAEL BEHRENDT, TOWN PLANNER
CERTIFIED _____
DATE _____

APPROXIMATE GRID NORTH SEE NOTE 7

4 OFF-RAMP

EOR

N60° 42' 49"W 35.88
L=71.06, R=200.00
L=168.38, R=140.00
N40° 21' 19"W 227.29
L=92.35, R=60.00
S50° 22' 33"W 64.37
L=183.21, R=300.00
N38° 16' 55"E 188.37
L=27.96, R=200.00

MANMADE CHANNEL

MATCH LINE
SEE LAYOUT PLAN – A

GRAPHIC SCALE
30 0 15 30 60 120
(IN FEET)
1 inch = 30 ft.

ALTUS ENGINEERING, INC.
133 COURT STREET PORTSMOUTH, NH 03801
VOICE: (603) 433-2335
FAX: (603) 433-4194

STATE OF NEW HAMPSHIRE
JEFFREY K. CLIFFORD No. 6524 LICENSED PROFESSIONAL ENGINEER

ISSUED FOR:
FINAL TOWN APPROVAL

ISSUE DATE:
MAY 23, 2018

REVISIONS

NO.	DESCRIPTION	BY	DATE
0	INITIAL SUBMISSION	JKC	10/16/17
1	PB RE-SUBMISSION	JKC	12/05/17
2	100% D.D.	JKC	12/22/17
3	NHDES AoT SUBMISSION	JKC	1/18/18
4	50% C.D.	JKC	2/16/18
5	PERMIT SET	JKC	3/16/18
6	BID SET	JKC	4/02/18
7	100% C.D.	JKC	4/13/18
8	FINAL TOWN APPROVAL	JKC	5/23/18

DRAWN BY: RMB
APPROVED BY: JKC
DRAWING FILE: 4836SITE.DWG

SCALE: 1 " = 30'

LAND OWNER – SUBJECT PARCEL:
RIVERWOODS DURHAM
5 WHITE OAK DRIVE
EXETER, NH 03833

APPLICANT:
THE RIVERWOODS GROUP
5 WHITE OAK DRIVE
EXETER, NH 03833

PROJECT:
RIVERWOODS DURHAM
STONE QUARRY DRIVE
DURHAM, NH

TITLE:
LAYOUT PLAN – B

SHEET NUMBER:
C - 3.1

P4836

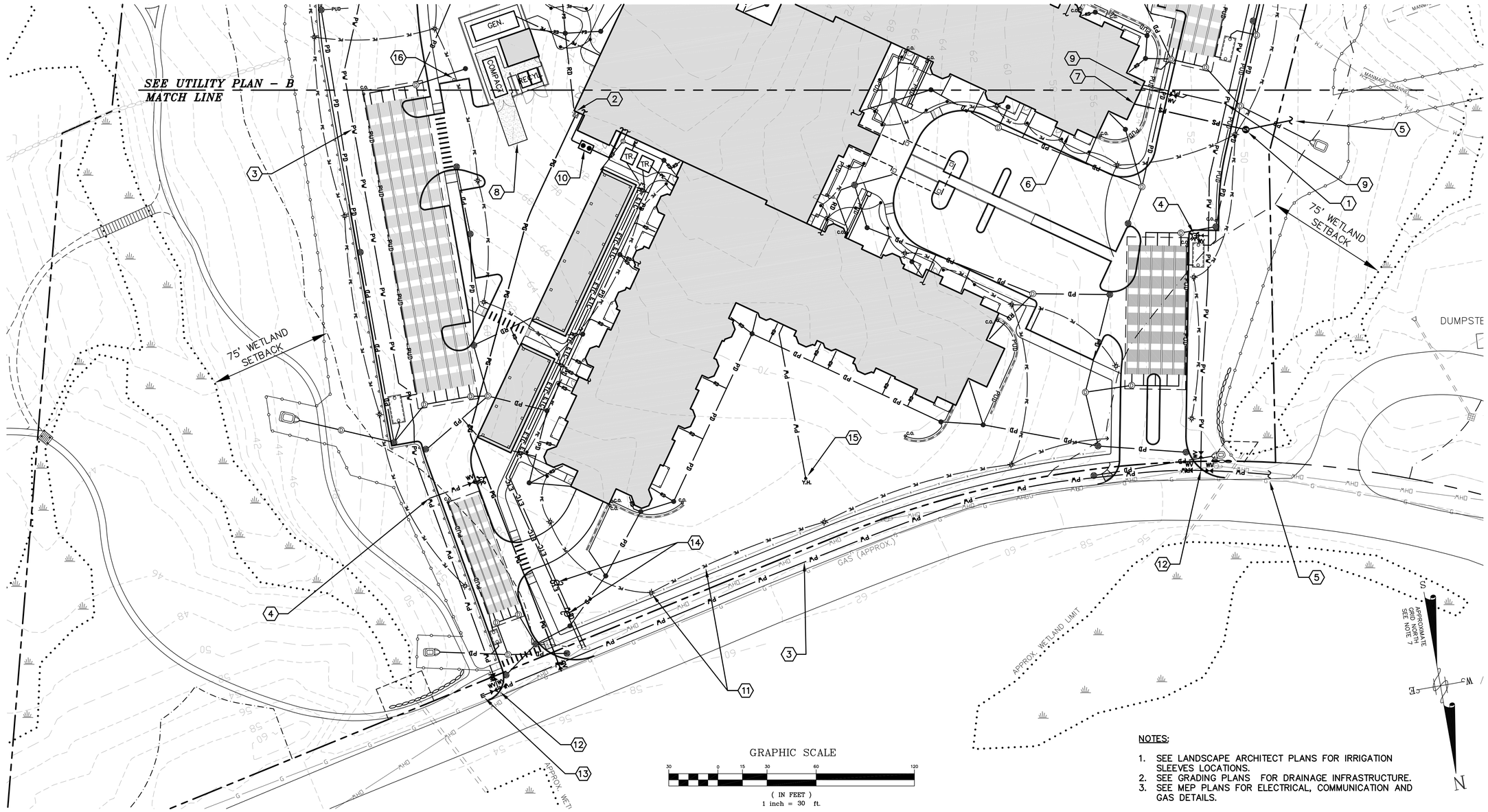

KEY NOTES

1. INSTALL PSMH #14; SEE SHEET C–4.3
2. INSTALL GAS SERVICE CONNECTION AND METER (SEE SHEET PC211 FOR DETAILS); INSTALL BOLLARDS AS REQUIRED PER UTILITY COMPANY REQUIREMENTS.
3. INSTALL 8" C900 DR18 WATERMAIN
4. INSTALL 8"x8"x6" CL52 D.I. TEE AND HYDRANT ASSEMBLY WITH (2) BOLLARDS
5. SEE SHEET C–4.2 & C–4.3, OFF–SITE UTILITY EXTENSION PLAN FOR CONTINUATION
6. SIAMESE CONNECTION OR FDC (SEE SHEET FP101 FOR DETAILS)
7. INSTALL 10" PVC SDR 35 SEWER SERVICE; INV. OUT=53.5'; REFER TO SHEET PC211
8. CONCRETE PAD FOR ROLL–OFF CONTAINER (SEE ARCH. DWG.S FOR DETAILS)
9. INSTALL 6" DOMESTIC AND 8" FIRE SERVICES (SEE SHEET FP101 AND PC211)
10. INSTALL GREASE INTERCEPTOR (SEE SHEET PC210 AND PT110)
11. INSTALL LIGHT POLE, BOLLARD AND CONDUIT, TYP. (SEE SHEET E101 FOR DETAILS)
12. INSTALL 8"x8"x8" TEE CONNECTION WITH VALVE CLUSTER
13. INSTALL END CAP
14. INSTALL NEW UTILITY POLE PER UTILITY COMPANY (SEE SHEET E101 FOR DETAILS)
15. INSTALL 1" WATER SERVICE AND YARD HYDRANT
16. ELECTRIC VEHICLE CHARGING STATION (SEE SHEET E101 FOR DETAILS)

NOTES:

1. SEE LANDSCAPE ARCHITECT PLANS FOR IRRIGATION SLEEVES LOCATIONS.
2. SEE GRADING PLANS FOR DRAINAGE INFRASTRUCTURE.
3. SEE MEP PLANS FOR ELECTRICAL, COMMUNICATION AND GAS DETAILS.

FINAL APPROVAL BY DURHAM PLANNING BOARD.
CERTIFIED BY MICHAEL BEHRENDT, TOWN PLANNER
CERTIFIED _____
DATE _____

P4836

ALTUS ENGINEERING, INC.
133 COURT STREET PORTSMOUTH, NH 03801
VOICE: (603) 433–2335
FAX: (603) 433–4194

JEFFREY K. CLIFFORD No. 6524 LICENSED PROFESSIONAL ENGINEER STATE OF NEW HAMPSHIRE

ISSUED FOR: FINAL TOWN APPROVAL

ISSUE DATE: MAY 23, 2018

REVISIONS

NO.	DESCRIPTION	BY	DATE
0	INITIAL SUBMISSION	JKC	7/19/17
1	PB RE–SUBMISSION	JKC	10/16/17
2	PB RE–SUBMISSION	JKC	12/05/17
3	100% D.D.	JKC	12/22/17
4	NHDES AoT SUBMISSION	JKC	1/18/18
5	50% C.D.	JKC	2/16/18
6	PERMIT SET	JKC	3/16/18
7	BID SET	JKC	4/02/18
8	100% C.D.	JKC	4/13/18
9	ADDENDUM 1	JKC	4/24/18
10	FINAL TOWN APPROVAL	JKC	5/23/18

DRAWN BY: RMB
APPROVED BY: JKC
DRAWING FILE: 4836SITE.DWG

SCALE: 1 " = 30'

LAND OWNER – SUBJECT PARCEL:
RIVERWOODS DURHAM
5 WHITE OAK DRIVE
EXETER, NH 03833

APPLICANT:
THE RIVERWOODS GROUP
5 WHITE OAK DRIVE
EXETER, NH 03833

PROJECT:
RIVERWOODS DURHAM
STONE QUARRY DRIVE
DURHAM, NH

TITLE:
UTILITY PLAN – A

SHEET NUMBER:
C - 4.0

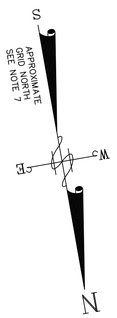

KEY NOTES

1. INSTALL PSMH #15; SEE SHEET C-4.3 FOR DETAILS
2. INSTALL GAS SERVICE CONNECTION AND METER (SEE MEP DWG.S FOR DETAILS); INSTALL BOLLARDS AS REQUIRED PER UTILITY COMPANY REQUIREMENTS.
3. INSTALL 8"ø C900 DR18 WATERMAIN
4. INSTALL 8"x8"x6" CL52 D.I. TEE AND HYDRANT ASSEMBLY WITH (2) BOLLARDS
5. SEE SHEET C-4.2 & C-4.3, OFF-SITE UTILITY EXTENSION PLAN FOR CONTINUATION
6. SIAMESE CONNECTION OR FDC (SEE SHEET FP101 FOR DETAILS)
7. INSTALL 10" PVC SDR 35 SEWER SERVICE; INV. OUT= 53.5'
8. CONCRETE PAD FOR ROLL-OFF CONTAINER (SEE ARCH. DWG.S FOR DETAILS)
9. INSTALL 6" DOMESTIC AND 8" FIRE SERVICES
10. INSTALL GREASE INTERCEPTOR (SEE SHEET PT110 FOR DETAILS)
11. SEE SHEET E101, ELECTRICAL SITE PLAN FOR ADDITIONAL DETAILS

FINAL APPROVAL BY DURHAM PLANNING BOARD.
CERTIFIED BY MICHAEL BEHRENDT, TOWN PLANNER
CERTIFIED _____
DATE _____

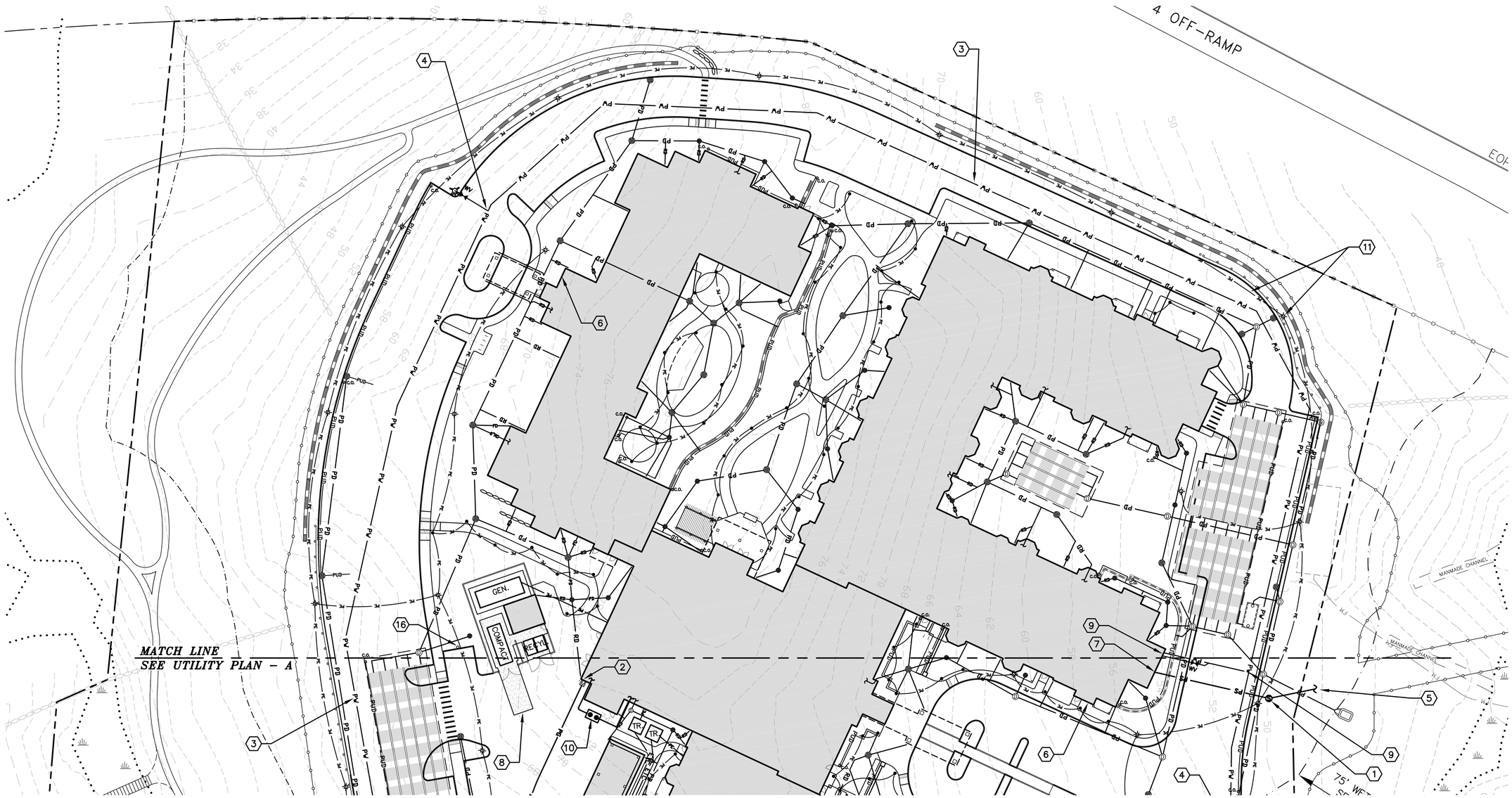

GRAPHIC SCALE

30 0 15 30 60 120

(IN FEET)
1 inch = 30 ft.

ALTUS ENGINEERING, INC.
133 COURT STREET PORTSMOUTH, NH 03801
VOICE: (603) 433-2335
FAX: (603) 433-4194

STATE OF NEW HAMPSHIRE
JEFFREY K. CLIFFORD
No. 6524
LICENSED
PROFESSIONAL ENGINEER

ISSUED FOR:
FINAL TOWN APPROVAL

ISSUE DATE:
MAY 23, 2018

REVISIONS

NO.	DESCRIPTION	BY	DATE
0	INITIAL SUBMISSION	JKC	7/19/17
1	PB RE-SUBMISSION	JKC	10/16/17
2	PB RE-SUBMISSION	JKC	12/05/17
3	100% D.D.	JKC	12/22/17
4	NHDES AoT SUBMISSION	JKC	1/18/18
5	50% C.D.	JKC	2/16/18
6	PERMIT SET	JKC	3/16/18
7	BID SET	JKC	4/02/18
8	100% C.D.	JKC	4/13/18
9	ADDENDUM 1	JKC	4/24/18
10	FINAL TOWN APPROVAL	JKC	5/23/18

DRAWN BY: RMB
APPROVED BY: JKC
DRAWING FILE: 4836SITE.DWG

SCALE:
1 " = 30'

LAND OWNER - SUBJECT PARCEL:
RIVERWOODS DURHAM
5 WHITE OAK DRIVE
EXETER, NH 03833

APPLICANT:
THE RIVERWOODS GROUP
5 WHITE OAK DRIVE
EXETER, NH 03833

PROJECT:
RIVERWOODS DURHAM
STONE QUARRY DRIVE
DURHAM, NH

TITLE:
UTILITY PLAN - B

SHEET NUMBER:
C - 4.1

P4836

SEE SHEET C-4.4 FOR DETAILS OF CONSTRUCTION IN THIS AREA

NOTE: SEE SHEETS C-4.4 THROUGH C-4.7 FOR LEGEND AND NOTES.

SEE SHEET C-4.5 FOR DETAILS OF CONSTRUCTION IN THIS AREA

MATCHLINE SHEET C-4.3

REMOVE STONE WALL, TREES, BRUSH AND VEGETATION TO THE EXTENT NECESSARY TO ACCOMPLISH WORK. AT COMPLETION OF WORK, REGRADE TO 3:1 SLOPE. LOAM, SEED AND STABILIZE WITH JUTE MAT. REPLACE STONE WALL IN KIND.

TEMPORARILY RELOCATE UTILITY POLE AND WIRES DURING WATER AND SEWER CONSTRUCTION. RESTORE POLE AND WIRES TO ORIGINAL LOCATION AFTER COMPLETION OF WORK. COORDINATE WORK WITH PUBLIC UTILITIES.

PROVIDE CATCH BASIN INSERT FOR EROSION CONTROL

PROVIDE TUBULAR SEDIMENT BARRIER FOR EROSION CONTROL

BEGIN WATER MAIN EXTENSION. INSTALL 8" GATE VALVE

INSTALL DOUBLE SILT BARRIER AT WORK LIMITS FOR EROSION CONTROL

INSTALL 6" SEWER SERVICE LATERAL AND CAP AND MARK WITH PRESSURE TREATED 2x4 TYP. OF 2

TBM – SPIKE EL=25.37

UNDERGROUND UTILITY MARKER (ABANDONED)

LIMIT OF CLEARING

NH Route 108

Old Piscataqua Road

Tidal Wetland

CONC. PAD/ VAULT

EXISTING PUMP STATION

PSMH 1 · PSMH 2 · PSMH 3 · PSMH 4 · PSMH 5 · PSMH 6 · PSMH 8

8" AC WATER MAIN (ACTIVE)

(12" CI FORCE MAIN (INACTIVE)

18" AC FORCE MAIN (ACTIVE)

LEDGE PROBE / TEST BORINGS (TYP.)

GAS VENT

ELEC. METER

NHHB

B-301 · B-302 · B-303 · B-304 · B-305

NOTES:

1. WETLAND DELINEATION PERFORMED BY GZA ENVIRONMENTAL, INC. ON NOVEMBER 29, 2017.

N/F
DAVID A JAQUES
JAQUES, LISA J
2 OLD PISCATAQUA ROAD
DURHAM, NH 03824
TAX MAP 11 LOT 11-2

N/F
BUBAR, JAMES A
BUBAR, LISA J
4 OLD PISCATAQUA ROAD
DURHAM, NH 03824
TAX MAP 11 LOT 11-6

N/F
JAQUES FAMILY
2015 REV TRUST
47 DOVER ROAD
DURHAM, NH 03824
TAX MAP 11 LOT 11-1

N/F
PETROVITSIS, STEPHEN J
PETROVITSIS, RENNIE J
72 PERKINS ROAD
MADBURY, NH 03823
TAX MAP 11 LOT 10-2

N/F
PETROVITSIS, STEPHEN J
PETROVITSIS, RENNIE J
72 PERKINS ROAD
MADBURY, NH 03823
TAX MAP 11 LOT 10-1

GRAPHIC SCALE
40 0 20 40 80 160
(IN FEET)
1 inch = 40 ft.

PROPOSED SEWER AND WATER PROFILE

HORIZONTAL SCALE: 1" = 40'
VERTICAL SCALE: 1" = 5'

ELEVATION

STATION

BYPASS AND REMOVE APPROXIMATELY 60 FEET OF 8" AC WATER MAIN TO FACILITATE INSTALLATION OF NEW GRAVITY SEWER AND HDPE FORCE MAIN PIPE. MINIMIZE DISRUPTION OF WATER SERVICE TO CONNECTED PROPERTIES. RECONNECT USING DI PIPE AND MANUFACTURED FITTINGS.

APPROXIMATE LOCATION OF EXISTING 12" CI FORCE MAIN (NORTH OF EXISTING WATER)

APPROXIMATE LOCATION OF EXISTING 8" AC WATER (NORTH OF EXISTING FM)

APPROXIMATE LOCATION OF EXISTING 18" AC FORCE MAIN (NORTH OF PROPOSED 12" SEWER)

CAP END OF 20" FORCE MAIN FOR FUTURE CONNECTION TO PUMP HOUSE

TIE EXISTING 2" FORCE MAIN WITH TEE-WYE FITTING

EXISTING 6' DIA. SMH

EXISTING 24" RCP, INV. ~ -4.18

SEAM IN STRUCTURE ~ELEV.=1.26

12" PVC L=103.6' S=0.0186

INV.=-0.72

DROP INV.= -3.20

12" PVC L=83.1' S=0.0886

OBSERVED WATER LEVEL (TYP)

PROPOSED 20" HDPE FORCE MAIN (SOUTH SIDE OF PROPOSED SEWER)

6" PVC SERVICE

CONSTRUCT NEW CONFLICT BOX DRAIN MANHOLE SEE SHEET C-6.5 RIM=16.82 INV. IN=11.25 (15" CMP) INV. OUT=11.15 (15" CMP) INV. IN=11.79 (12" PVC SEWER) INV. OUT=11.78 (12" PVC SEWER)

18" CMP CULVERT

15" CMP CULVERT

12" PVC* L=253.6' S=0.0022

AFTER CROSSING UNDER 8" AC WATER, JOG 18" FORCE MAIN UP AND OVER 15" CMP DRAINAGE AND NEW 12" PVC GRAVITY SEWER

12" PVC* L=42.8' S=0.0022

CAP END OF 20" FORCE MAIN FOR FUTURE EXTENSION

12" PVC* L=163.0' S=0.0080

WHERE SEPARATION FROM SEWER TO CULVERT IS LESS THAN 24" INSULATE WITH TWO LAYERS OF 4'x8'x1" POLYSTYRENE INSULATION RUNNING PARALLEL TO AND CENTERED ON CULVERT. (TYP)

15" RCP CULVERT

TEST BORING WITH NO REFUSAL (TYP.)

12" PVC L=295.2' S=0.0143

6" PVC SERVICE

TRENCH DAM, TYP. SEE DETAIL SHEET C-6.4

12" PVC* L=166.4' S=0.0022

6" PVC SERVICE

PROPOSED FINISHED GRADE

PROPOSED 8" DR18 C900 PVC WATER

APPROX. END OF EXISTING 8" WATER

EXISTING GRADE

APPROXIMATE DEPTH OF EXISTING 8" WATER

APPROX. LOCATION OF GAS CROSSING

OLD PISCATAQUA ROAD

WETLAND CROSSING #1

WETLAND CROSSING #2

APPROXIMATE LOCATION NEW 18" HDPE FORCE MAIN CROSSING EXISTING 8" AC WATER STATION 4+35

APPROXIMATE LOCATION GRAVITY SEWER CROSSING EXISTING 8" AC WATER STATION 4+84

APPROXIMATE LOCATION NEW 18" HDPE FORCE MAIN CROSSING 12" GRAVITY SEWER STATION 4+92

APPROXIMATE LOCATION WATER CROSSING STATION 6+49

PSMH 2 DROP MANHOLE RIM=17.35 INV. IN=11.30 INV. OUT=8.78

PSMH 1 RIM=7.70 INV. IN=1.42 INV. OUT=1.21

PSMH 3 RIM=18.45 INV. IN=11.96 INV. OUT=11.86

PSMH 4 RIM=20.95 INV. IN=12.16 INV. OUT=12.05

PSMH 5 RIM=23.10 INV. IN=13.56 INV. OUT=13.46

PSMH 6 RIM=28.80 INV. IN=17.78 INV. OUT=17.68

NOTE: PVC GRAVITY SEWER PIPE DENOTED BY "PVC*" SHALL BE DR21 C900 PIPE. PIPE WITHOUT THE * DESIGNATION SHALL BE SDR 35 PIPE. SEE SHEET C-4.6 FOR PIPE SCHEDULE.

P4836.51

ALTUS ENGINEERING, INC.
133 COURT STREET PORTSMOUTH, NH 03801
VOICE: (603) 433-2335
FAX: (603) 433-4194

JEFFREY K. CLIFFORD No. 6524 LICENSED PROFESSIONAL ENGINEER STATE OF NEW HAMPSHIRE

ISSUED FOR: FINAL TOWN APPROVAL

ISSUE DATE: MAY 23, 2018

REVISIONS

NO.	DESCRIPTION	BY	DATE
0	INITIAL SUBMISSION	JKC	07/19/17
1	PB RE-SUBMISSION	JKC	10/16/17
2	PB RE-SUBMISSION	JKC	12/05/17
3	100% D.D.	JKC	12/22/17
4	UTILITY CONN. PERMIT	JKC	01/08/18
5	NHDES AoT SUBMITTAL	JKC	01/18/18
6	NHDOT SUBMITTAL	JKC	01/25/18
7	50% C.D.	JKC	02/16/18
8	WETLANDS SUBMITTAL	JKC	02/28/18
9	CONSTRUCTION DOCS.	JKC	03/16/18
10	BID SET	JKC	04/02/18
11	100% C.D.	JKC	04/13/18
12	NHDES WWE REVIEW	JKC	04/13/18
13	ADDENDUM 1	JKC	04/24/18
14	FINAL TOWN APPROVAL	JKC	5/23/18

DRAWN BY: DMM
APPROVED BY: JKC
DRAWING FILE: 4836.51_SEWER.DWG

SCALE: 1 " = 40'

LAND OWNER – SUBJECT PARCEL:
RIVERWOODS DURHAM
5 WHITE OAK DRIVE
EXETER, NH 03833

APPLICANT:
THE RIVERWOODS GROUP
5 WHITE OAK DRIVE
EXETER, NH 03833

PROJECT:
RIVERWOODS DURHAM
STONE QUARRY DRIVE
DURHAM, NH

TITLE:
OFF-SITE UTILITY EXTENSION PLAN

SHEET NUMBER:
C - 4.2

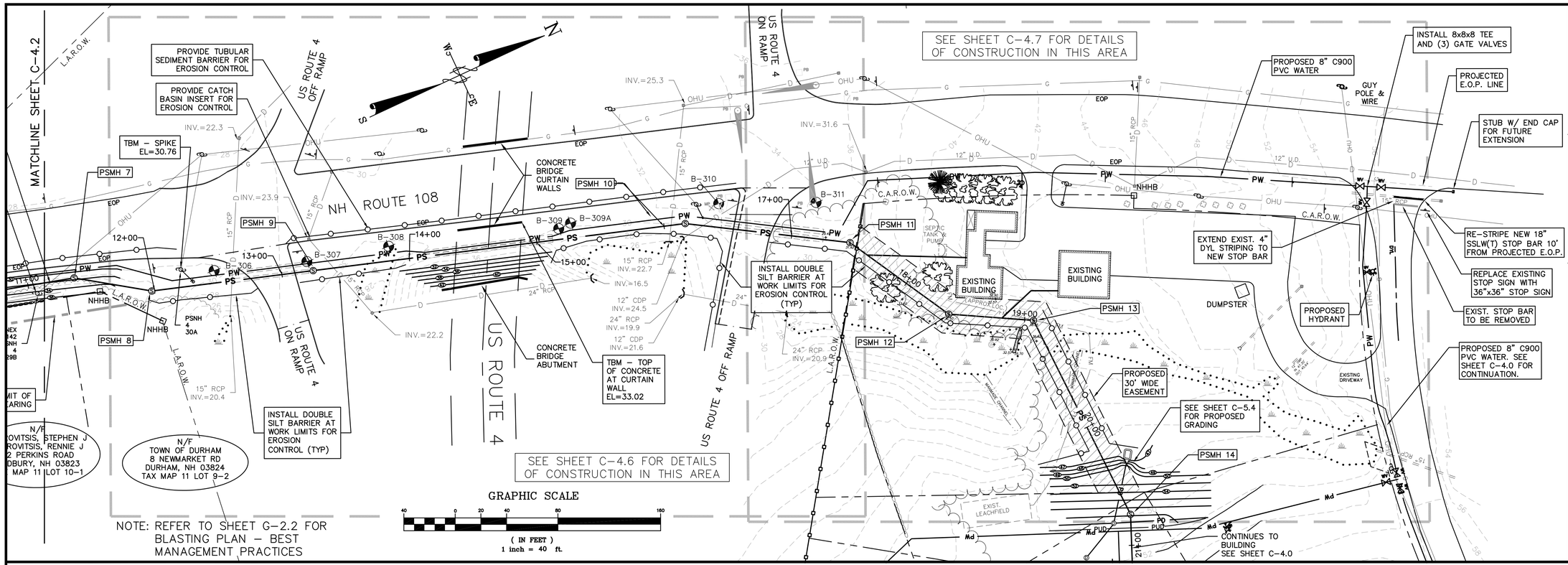

ALTUS ENGINEERING, INC.
133 COURT STREET PORTSMOUTH, NH 03801
VOICE: (603) 433-2335
FAX: (603) 433-4194

STATE OF NEW HAMPSHIRE — JEFFREY K. CLIFFORD No. 6524 — LICENSED PROFESSIONAL ENGINEER

ISSUED FOR:
FINAL TOWN APPROVAL

ISSUE DATE:
MAY 23, 2018

REVISIONS

NO.	DESCRIPTION	BY	DATE
0	INITIAL SUBMISSION	JKC	07/19/17
1	PB RE-SUBMISSION	JKC	10/16/17
2	PB RE-SUBMISSION	JKC	12/05/17
3	100% D.D.	JKC	12/22/17
4	UTILITY CONN. PERMIT	JKC	01/08/18
5	NHDES AoT SUBMITTAL	JKC	01/18/18
6	NHDOT SUBMITTAL	JKC	01/25/18
7	50% C.D.	JKC	02/16/18
8	WETLANDS SUBMITTAL	JKC	02/28/18
9	CONSTRUCTION DOCS.	JKC	03/16/18
10	BID SET	JKC	04/02/18
11	100% C.D.	JKC	04/13/18
12	NHDES WWE REVIEW	JKC	04/13/18
13	ADDENDUM 1	JKC	04/24/18
14	FINAL TOWN APPROVAL	JKC	5/23/18

DRAWN BY: DMM
APPROVED BY: JKC
DRAWING FILE: 4836.51SEWER.DWG

SCALE: 1 " = 40'

LAND OWNER - SUBJECT PARCEL:
RIVERWOODS DURHAM
5 WHITE OAK DRIVE
EXETER, NH 03833

APPLICANT:
THE RIVERWOODS GROUP
5 WHITE OAK DRIVE
EXETER, NH 03833

PROJECT:
RIVERWOODS DURHAM
STONE QUARRY DRIVE
DURHAM, NH

TITLE:
OFF-SITE UTILITY EXTENSION PLAN

SHEET NUMBER:
C - 4.3

P4836.51

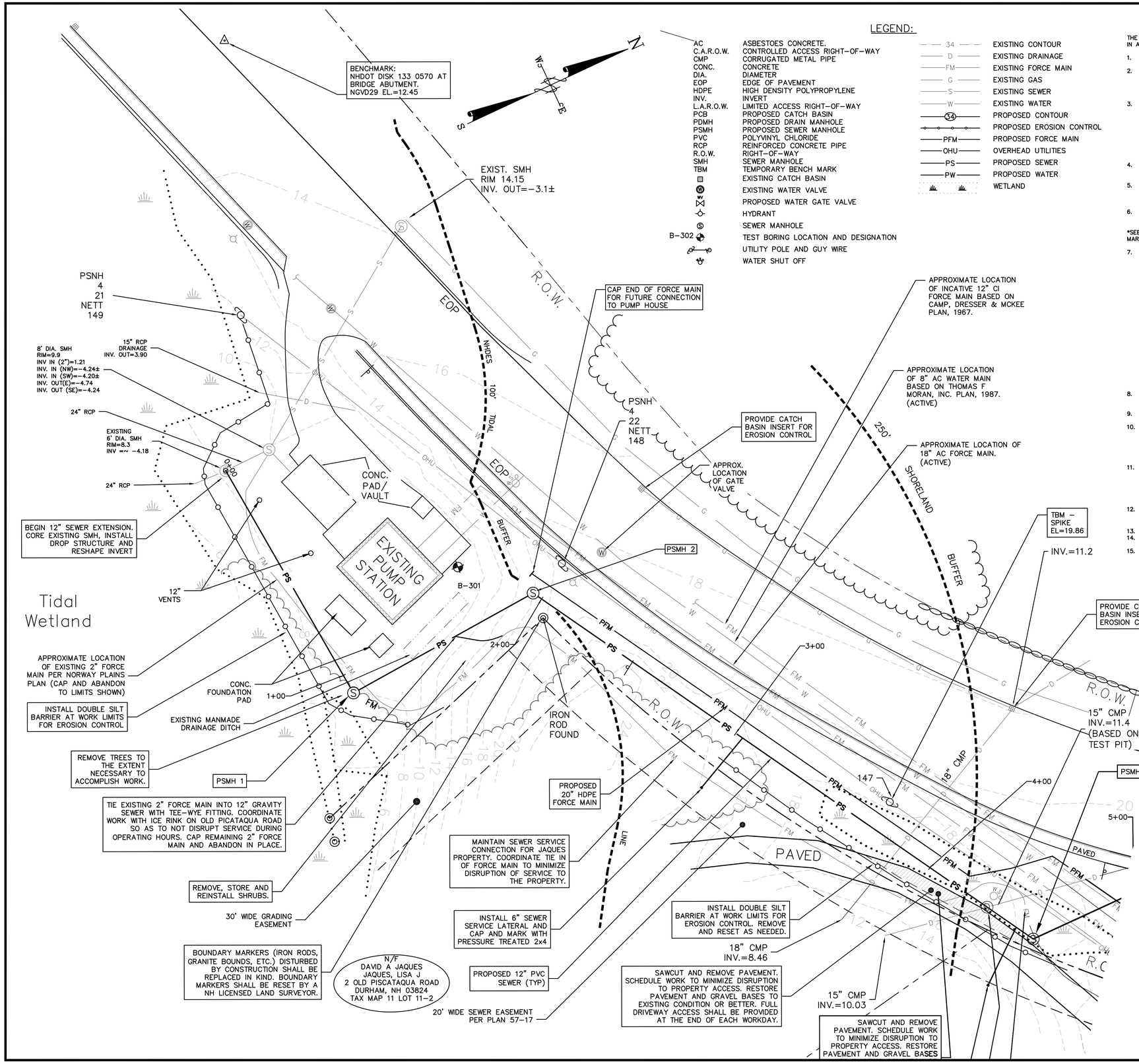

LEGEND:

AC	ASBESTOES CONCRETE.
C.A.R.O.W.	CONTROLLED ACCESS RIGHT-OF-WAY
CMP	CORRUGATED METAL PIPE
CONC.	CONCRETE
DIA.	DIAMETER
EOP	EDGE OF PAVEMENT
HDPE	HIGH DENSITY POLYPROPYLENE
INV.	INVERT
L.A.R.O.W.	LIMITED ACCESS RIGHT-OF-WAY
PCB	PROPOSED CATCH BASIN
PDMH	PROPOSED DRAIN MANHOLE
PSMH	PROPOSED SEWER MANHOLE
PVC	POLYVINYL CHLORIDE
RCP	REINFORCED CONCRETE PIPE
R.O.W.	RIGHT-OF-WAY
SMH	SEWER MANHOLE
TBM	TEMPORARY BENCH MARK
	EXISTING CATCH BASIN
	EXISTING WATER VALVE
	PROPOSED WATER GATE VALVE
	HYDRANT
	SEWER MANHOLE
B-302	TEST BORING LOCATION AND DESIGNATION
	UTILITY POLE AND GUY WIRE
	WATER SHUT OFF

34	EXISTING CONTOUR
D	EXISTING DRAINAGE
FM	EXISTING FORCE MAIN
G	EXISTING GAS
S	EXISTING SEWER
W	EXISTING WATER
34	PROPOSED CONTOUR
	PROPOSED EROSION CONTROL
PFM	PROPOSED FORCE MAIN
OHU	OVERHEAD UTILITIES
PS	PROPOSED SEWER
PW	PROPOSED WATER
	WETLAND

SEQUENCE FOR SEWER LINE INSTALLATION AND WETLAND RESTORATION AT TEMPORARY WETLAND IMPACT LOCATIONS

THE SEWER LINE INSTALLATION AND RESTORATION OF THE IMPACTED WETLAND AREAS WILL OCCUR IN ACCORDANCE WITH THE FOLLOWING SEQUENCE:

1. CLEARLY MARK WETLAND BOUNDARIES AND LIMIT OF APPROVED IMPACTS PRIOR TO THE START OF WORK.
2. REMOVE TREES, SAPLINGS AND SHRUBS, AS NEEDED, WITHIN UTILITY TRENCH AREA. USE GOOD FORESTRY PRACTICES TO MINIMIZE SOIL DISTURBANCE. STOCKPILE STUMPS AND ANY WOODY DEBRIS THAT MAY BE A SEDIMENT SOURCE OUTSIDE OF NH DES WETLANDS BUREAU JURISDICTION AND SURROUND WITH SEDIMENT CONTROL MEASURES. MAINTAIN A STOCKPILE OF COARSE WOODY DEBRIS FOR USE IN FINAL RESTORATION OF IMPACT AREAS.
3. INSTALL EROSION CONTROL PERPENDICULAR TO DIRECTION OF WATER FLOW, DOWN SLOPE OF THE TEMPORARY IMPACT AREA AT THE LIMIT OF DISTURBANCES. INSTALL EROSION CONTROL ACCORDING TO THE DETAILS.
   A. KEEP EROSION CONTROL IN PLACE AND REGULARLY MAINTAIN TO ENSURE IT IS IN PROPER WORKING ORDER AT ALL TIMES UNTIL ALL EXPOSED SOILS ARE PERMANENTLY STABILIZED.
   B. INSTALLATION OF ADDITIONAL EROSION CONTROL AND/OR OTHER EROSION AND SEDIMENT CONTROL BEST MANAGEMENT PRACTICES (BMPS) MAY BE REQUIRED IF SITE-SPECIFIC CONDITIONS WARRANT A GREATER LEVEL OF PROTECTION.
4. INSTALL NON-WOVEN GEOTEXTILE OVER TEMPORARY WORK AREA TO BE USED BY VEHICLES TO ACCESS AND EXCAVATE TRENCH, AND INSTALL PIPE. COVER WITH GRAVEL TO MINIMUM DEPTH OF TWELVE (12) INCHES.
5. STOCKPILE THE ORGANIC TOPSOIL SEPARATE FROM REMAINING TRENCH SOIL MATERIAL FOR USE IN TOPDRESSING THE WETLAND RESTORATION AREAS. IF TOPSOIL IS STOCKPILED FOR MORE THAN A FIVE-DAY PERIOD WITHOUT RAIN, WATER THE SOIL MATERIAL TO PREVENT DRY OUT OF THE NATURAL SEED BANK.
6. IF NECESSARY, USE TRENCH SOIL MATERIAL TO BUILD BERM UPSLOPE OF TEMPORARY IMPACT AREA, NOT IN WETLANDS, TO DIRECT CLEAN WATER AWAY FROM WORK AREA.

*SEE SPECIAL SEQUENCE BELOW FOR IMPACT AREA NEAR STREAM ON EXISTING OFFICE / MARKETING CENTER PROPERTY WHEN WORKING IN THAT AREA.

7. EXCAVATE THE TRENCH AND INSTALL SEWER LINE IN ACCORDANCE WITH THE PLAN AND DETAILS.
   A. STOCKPILES OF SOIL MATERIALS ARE TO BE STORED OUTSIDE OF NH DES WETLANDS BUREAU JURISDICTION AND SURROUNDED WITH SEDIMENT CONTROL MEASURES.
   B. MATERIALS NECESSARY FOR WORK-IN-PROGRESS MAY BE TEMPORARILY LOCATED ALONG THE EXCAVATED UTILITY TRENCH. TEMPORARY STORAGE OF ERODEABLE MATERIAL IS TO BE LOCATED UPSLOPE OF THE EXCAVATED UTILITY TRENCH SO THAT THE TRENCH CAPTURES ANY ERODING SEDIMENT.
   C. MINIMIZE THE LENGTH OF TIME THE TRENCH IS LEFT OPEN AND MATERIALS ARE TEMPORARILY STOCKPILED BY CLOSING EACH TRENCH SECTION AS IT IS COMPLETED. EXCESS MATERIALS ARE TO BE REMOVED FROM NH DES WETLANDS BUREAU JURISDICTIONAL AREAS AS TRENCH SECTIONS ARE COMPLETED.
   D. IF DEWATERING OF AN OPEN SECTION OF TRENCH IS REQUIRED, DIRECT THE SEDIMENT – LADEN PUMP WATER TO A "DIRTBAG" FILTER (BY THE BMP STORE (800-644-9223) OR APPROVED EQUAL), PLACED WITHIN A DEWATERING BASIN. THE DEWATERING BASIN SHALL CONSIST OF A 10' X 10' X 1' AREA (MINIMUM) OF 1 1/2 INCH STONE THAT IS SURROUNDED BY SILT FENCE, WHICH IS BACKED BY HAY BALES. LOCATE THE DEWATERING BASIN IN AN UPLAND AREA WHERE TREATED WATER WILL NOT ACQUIRE SEDIMENT BEFORE ENTERING WETLAND AREAS OR DRAINAGE STRUCTURES. ANY ALTERNATE DEWATERING AND SEDIMENT CONTROL METHOD MUST BE SUBMITTED TO THE ENGINEER FOR APPROVAL.
8. BACKFILL TRENCH WITH EXCAVATED MATERIAL, WITH STOCKPILED WETLAND TOPSOIL COMPRISING AT LEAST THE TOP SIX INCHES. TEMPORARY WETLAND IMPACT AREAS ARE TO BE RETURNED TO THEIR ORIGINAL GRADE, CONSISTENT WITH SURROUNDING UNDISTURBED WETLAND AREAS.
9. REMOVE GRAVEL FILL AND FILTER FABRIC FROM TEMPORARY WORK AREAS AND SCARIFY COMPACTED TOPSOIL.
10. SEED AND MULCH THE TEMPORARY IMPACT AREAS FOLLOWING COMPLETION OF WORK ON EACH SECTION.
    A. SEED THE TEMPORARY IMPACT AREAS ACCORDING TO THE SEEDING SPECIFICATIONS.
    B. LIGHTLY MULCH RESTORATION AREAS WITH A CLEAN, WEED-FREE STRAW. IF SEED IS SPREAD VIA HYDRO-SEEDING THIS STEP IS NOT NECESSARY, THOUGH IT IS STILL RECOMMENDED.
11. STEEP SLOPES (GREATER THAN 3:1) SHALL BE STABILIZED WITH HEAVY JUTE MATTING OR OTHER MATTING AS APPROVED BY THE ENGINEER. SEED WITH A MIX OF 50% NEW ENGLAND EROSION CONTROL / RESTORATION MIX FOR DRY SITES (1,250 SF/LB) AND 50% NEW ENGLAND CONSERVATION / WILDLIFE MIX (1,760 SF/LB) FROM NEW ENGLAND WETLAND PLANTS, INC. (WWW.NEWP.COM<HTTP://WWW.NEWP.COM>). SEED PER NEW ENGLAND WETLAND PLANTS, INC. RECOMMENDATIONS.
12. A SUPPLY OF DEAD AND DYING WOODY DEBRIS SHALL COVER AT LEAST 4% OF THE GROUND THROUGHOUT THE RESTORATION AREAS AFTER CONSTRUCTION (PER U.S. ARMY CORPS OF ENGINEERS).
13. VEHICULAR ACCESS IS NO LONGER ALLOWED ONCE AREA HAS BEEN SEEDED AND/OR PLANTED.
14. AFTER SIX WEEKS, RE-SEED WITH WETLAND SEED MIX ANY PORTION OF THE RESTORATION AREA THAT HAS NOT BEEN STABILIZED BY THE ORIGINAL SEED APPLICATION.
15. REMOVE THE EROSION AND SEDIMENT CONTROL BMPS ONCE THE RESTORATION AREA HAS BEEN PERMANENTLY STABILIZED. DISPOSE OF PROPERLY.

SEEDING SPECIFICATIONS (SEE NOTE 11 ABOVE REGARDING SEEDING OF STEEP SLOPES)

ALL TEMPORARY WETLAND IMPACT AREAS AND THE WETLAND RESTORATION AREA WILL BE SEEDED WITH A WETLAND SEED MIX @ 1LB./5,000 SQ. FT., SUCH AS NEW ENGLAND WETMIX (NEW ENGLAND WETLAND PLANTS, INC., 820 WEST ST., AMHERST, MA 01002 PH. 413-548-8000) OR AN EQUIVALENT, WHICH TYPICALLY INCLUDES: FOX SEDGE (CAREX VULPINOIDEA), GRASS-LEAVED GOLDENROD (SOLIDAGO GRAMINIFOLIA), FLAT-TOP ASTER (ASTER UMBELLATUS), HARD-STEM BULRUSH (SCHOENOPLECTUS ACUTUS), SOFT RUSH (JUNCUS EFFUSUS), BEARDED SEDGE (CAREX COMOSA), LURID SEDGE (CAREX LURIDA), WOOLGRASS (SCIRPUS CYPERINUS), BONESET (EUPATORIUM PERFOLIATUM), HOP SEDGE (CAREX LUPULINA), BLUE VERVAIN (VERBENA HASTATA), NODDING SEDGE (CAREX GYNANDRA), GREEN BULRUSH (SCIRPUS ATROVIRENS), SENSITIVE FERN (ONOCLEA SENSIBILIS), BLUE FLAG IRIS (IRIS VERSICOLOR), SPOTTED JOE-PYE WEED (EUPATORIUM MACULATUM), SWAMP MILKWEED (ASCLEPIAS INCARNATE), MONKEY FLOWER (MIMULUS RINGENS) AND SOFT-STEM BULRUSH (SHOENOPLECTUS TABERNAEMONTANI).

MAINTENANCE OF EXISTING SERVICES

CONTRACTOR WILL CONDUCT WORK SO AS TO MINIMIZE DISRUPTIONS TO EXISTING SEWER AND WATER CONNECTIONS. CONTRACTOR SHALL CONSTRUCT BYPASS LINES TO MAINTAIN SERVICES TO EXISTING PROPERTIES DURING THE COURSE OF WORK AND MAINTAIN THE SYSTEMS UNTIL WORK IS COMPLETED. CONTRACTOR SHALL NOTIFY PROPERTY OWNERS OF DISRUPTIONS OF SERVICE 48 HOURS IN ADVANCE OF WORK.

CONNECTED PROPERTIES INCLUDE, BUT ARE NOT LIMITED TO THE FOLLOWING:

MAP / LOT	OWNER	CONNECTIONS
11 / 11-2	DAVID & LISA JAQUES	WATER / CONNECTION TO 2" FORCE MAIN
11 / 11-6	JAMES & LISA BUBAR	WATER / CONNECTION TO 2" FORCE MAIN
11 / 11-3	TOWN OF DURHAM (ICE RINK)	WATER / CONNECTION TO 2" FORCE MAIN
11 / 10-1	STEPHEN & RENNIE PETROVITSIS	WATER
11 / 10-2	STEPHEN & RENNIE PETROVITSIS	WATER

GRAPHIC SCALE

20 0 10 20 40 80

(IN FEET)
1 inch = 20 ft.

P4836.51

ALTUS ENGINEERING, INC.
133 COURT STREET PORTSMOUTH, NH 03801
VOICE: (603) 433-2335
FAX: (603) 433-4194

STATE OF NEW HAMPSHIRE
JEFFREY K. CLIFFORD
No. 6524
LICENSED PROFESSIONAL ENGINEER

ISSUED FOR:
FINAL TOWN APPROVAL

ISSUE DATE:
MAY 23, 2018

REVISIONS

NO.	DESCRIPTION	BY	DATE
0	50% C.D.	JKC	02/16/18
1	WETLANDS SUBMITTAL	JKC	02/28/18
2	CONSTRUCTION DOCS.	JKC	03/16/18
3	BID SET	JKC	04/02/18
4	100% C.D.	JKC	04/13/18
5	ADDENDUM 1	JKC	04/24/18
6	FINAL TOWN APPROVAL	JKC	5/23/18

DRAWN BY: DMM
APPROVED BY: JKC
DRAWING FILE: 4836.51SEWER.DWG

SCALE: 1 " = 20'

LAND OWNER – SUBJECT PARCEL:
RIVERWOODS DURHAM
5 WHITE OAK DRIVE
EXETER, NH 03833

APPLICANT:
THE RIVERWOODS GROUP
5 WHITE OAK DRIVE
EXETER, NH 03833

PROJECT:
RIVERWOODS DURHAM
STONE QUARRY DRIVE
DURHAM, NH

TITLE:
OFF-SITE UTILITY ENLARGEMENT PLAN A

SHEET NUMBER:
C - 4.4

LEGEND:

AC	ASBESTOES CONCRETE.
C.A.R.O.W.	CONTROLLED ACCESS RIGHT–OF–WAY
CMP	CORRUGATED METAL PIPE
CONC.	CONCRETE
DIA.	DIAMETER
EOP	EDGE OF PAVEMENT
HDPE	HIGH DENSITY POLYPROPYLENE
INV.	INVERT
L.A.R.O.W.	LIMITED ACCESS RIGHT–OF–WAY
PCB	PROPOSED CATCH BASIN
PDMH	PROPOSED DRAIN MANHOLE
PSMH	PROPOSED SEWER MANHOLE
PVC	POLYVINYL CHLORIDE
RCP	REINFORCED CONCRETE PIPE
R.O.W.	RIGHT–OF–WAY
SMH	SEWER MANHOLE
TBM	TEMPORARY BENCH MARK

	EXISTING CATCH BASIN
W	EXISTING WATER VALVE
WV	PROPOSED WATER GATE VALVE
	HYDRANT
S	SEWER MANHOLE
B–302	TEST BORING LOCATION AND DESIGNATION
	UTILITY POLE AND GUY WIRE
	WATER SHUT OFF

34	EXISTING CONTOUR
D	EXISTING DRAINAGE
FM	EXISTING FORCE MAIN
G	EXISTING GAS
S	EXISTING SEWER
W	EXISTING WATER
34	PROPOSED CONTOUR
	PROPOSED EROSION CONTROL
PFM	PROPOSED FORCE MAIN
OHU	OVERHEAD UTILITIES
PS	PROPOSED SEWER
PW	PROPOSED WATER
	WETLAND

PERMITS / APPROVALS

NAME	TRACKING NO.	STATUS	APPROVAL DATE
TOWN OF DURHAM UTILITY CONNECTION		APPROVED	2/5/2018
NHDES WETLANDS PERMIT	2018–00607	PENDING	5/16/2018
NHDES SHORELAND PERMIT	2018–00968	APPROVED	4/27/2018
NHDES WASTE WATER ENGINEERING REVIEW	D2018–0404	APPROVED	4/17/2018
NHDES DRINKING WATER BUREAU REVIEW	N/A	APPROVED	4/18/2018
NHDOT EXCAVATION PERMIT		PENDING	

NOTE: THE DESIGN OF OFF–SITE UTILITY APPROVALS SHOWN ON SHEETS C–4.2 TO C–4.8 ARE SUBJECT TO APPROVAL BY THE NH DEPARTMENT OF TRANSPORTATION AND THE NH DEPARTMENT OF ENVIRONMENTAL SERVICES. DO NOT BEGIN WORK UNTIL ALL PERMITS AND APPROVALS ARE OBTAINED.

APPROXIMATE LOCATION OF 18" AC FORCE MAIN. (ACTIVE)

TBM – SPIKE EL=19.86

INV.=11.2

PROVIDE CATCH BASIN INSERT FOR EROSION CONTROL

CAP END OF 20" HDPE FORCE MAIN FOR FUTURE EXTENSION

IF NECESSARY REMOVE TREE FOR SEWER MAIN INSTALLATION. DO NOT REPLACE.

APPROXIMATE LOCATION OF INCATIVE 12" CI FORCE MAIN BASED ON CAMP, DRESSER & MCKEE PLAN, 1967.

RESTORE SIDEWALK AND CURB TO MATCH EXISTING.

LIMIT OF PAVEMENT REPAIR / OVERLAY.

RELOCATE EXISTING POST MOUNTED ELEC. METER FOR REAL TIME TRAFFIC MANAGEMENT (RTTP) SIGN TO LOCATION APPROVED BY NHDOT. NOTIFY NHDOT BUREAU OF CONSTRUCTION (603–271–2571) AND THE NH TRANSPORTATION MANAGEMENT CENTER (603–271–6862) 48 HOURS IN ADVANCE OF THE WORK. SCHEDULE WORK TO MINIMIZE DISRUPTION TO THE OPERATION OF THE RTTP SIGN.

LEDGE PROBE / TEST BORINGS (TYP.)

PROVIDE CATCH BASIN INSERT FOR EROSION CONTROL

15" CMP INV.=11.4 (BASED ON TEST PIT)

PSMH 3

PSMH 4

INV.=12.7

GAS VENT

INV.=14.1

NET+T 79 145 PSNH 4 27

NYNEX 143 PSNH 4 29

15" RCP

B–302

B–303

B–304

INV.=19.3

NYNEX 10 PSNH 22 1

FP 379 145 EVERSOURCE 4–27

PSMH 5

NHDOT TRAFFIC INFORMATION SIGN

144

TBM – SPIKE EL=25.37

INSTALL 6" SEWER SERVICE LATERAL AND CAP AND MARK WITH PRESSURE TREATED 2x4 TYP. OF 2

15" CMP INV.=10.03

SAWCUT AND REMOVE PAVEMENT. SCHEDULE WORK TO MINIMIZE DISRUPTION TO PROPERTY ACCESS. RESTORE PAVEMENT AND GRAVEL BASES TO EXISTING CONDITION OR BETTER. FULL DRIVEWAY ACCESS SHALL BE PROVIDED AT THE END OF EACH WORKDAY.

INSTALL 6" SEWER SERVICE LATERAL AND CAP AND MARK WITH PRESSURE TREATED 2x4

CONSTRUCT CONFLICT BOX AT INTERSECTION OF NEW SEWER AND EXISTING DRAINAGE SEE DETAIL ON SHEET C–6.5

REROUTE EXISTING 2" FORCE MAIN AS NECESSARY TO CONSTRUCT SEWER. COORDINATE WORK TO MINIMIZE DISRUPTION OF SERVICE TO PROPERTY OWNERS AND ICE RINK.

APPROXIMATE LOCATION OF EXISTING 2" FORCE MAIN PER TOWN RECORDS

PROVIDE CATCH BASIN INSERT FOR EROSION CONTROL

APPROXIMATE LOCATION OF EXISTING UNDERGROUND TELEPHONE CONDUIT (INACTIVE)

CUT AND COVER FOR SEWER UNDER ROAD AND WATER MAIN CROSSING

NH Route 108

Old Piscataqua Road

R.O.W. NHHB

C.A.R.O.W.

DRIVEWAY

SHORELAND BUFFER

PAVED SIDEWALK

EOP

GRAPHIC SCALE

20 0 10 20 40 80

(IN FEET)
1 inch = 20 ft.

P4836.51

ALTUS ENGINEERING, INC.
133 COURT STREET PORTSMOUTH, NH 03801
VOICE: (603) 433–2335
FAX: (603) 433–4194

STATE OF NEW HAMPSHIRE
JEFFREY K. CLIFFORD No. 6524
LICENSED PROFESSIONAL ENGINEER

ISSUED FOR:
FINAL TOWN APPROVAL

ISSUE DATE:
MAY 23, 2018

REVISIONS

NO.	DESCRIPTION	BY	DATE
0	50% C.D.	JKC	02/16/18
1	WETLANDS SUBMITTAL	JKC	02/28/18
2	CONSTRUCTION DOCS.	JKC	03/16/18
3	BID SET	JKC	04/02/18
4	100% C.D.	JKC	04/13/18
5	ADDENDUM 1	JKC	04/24/18
6	FINAL TOWN APPROVAL	JKC	5/23/18

DRAWN BY: DMM
APPROVED BY: JKC
DRAWING FILE: 4836.51SEWER.DWG

SCALE: 1 " = 20'

LAND OWNER – SUBJECT PARCEL:
RIVERWOODS DURHAM
5 WHITE OAK DRIVE
EXETER, NH 03833

APPLICANT:
THE RIVERWOODS GROUP
5 WHITE OAK DRIVE
EXETER, NH 03833

PROJECT:
RIVERWOODS DURHAM
STONE QUARRY DRIVE
DURHAM, NH

TITLE:
OFF–SITE UTILITY ENLARGEMENT PLAN B

SHEET NUMBER:
C - 4.5

PROVIDE (2) 3" PVC SCH 80 CONDUITS FOR FUTURE SIGNALIZED INTERSECTION CONTROLS. INSTALL ¼" THREE STRAND POLYPROPYLENE YEELOW ROPE IN EACH CONDUIT. MARK CAPPED ENDS WITH WITNESS POSTS.

PLANNED LOCATION OF FUTURE TRAFFIC SIGNAL MAST ARMS, PULL BOXES AND CONTROLS PER NHDOT.

US ROUTE 4 WB ON RAMP

PROVIDE 10' MINIMUM SEPARATION BETWEEN CURTAIN WALL AND OUTSIDE FACE OF TRENCH BOX DURING CONSTRUCTION

CONSTRUCT 80 FT. x 16" SLEEVE FOR 8" WATER UNDER RAMP

INV.=25.3

PROVIDE CATCH BASIN INSERT FOR EROSION CONTROL

US ROUTE 4 EB OFF RAMP

PROVIDE TUBULAR SEDIMENT BARRIER FOR EROSION CONTROL

INV.=22.3

INV.=31.6

EOP

15" RCP

12" U.D.

CONCRETE BRIDGE CURTAIN WALLS

A

PSMH 10

16+00

NH ROUTE 108

CONSTRUCT 60 FT. x 16" SLEEVE FOR 8" WATER UNDER RAMP

INV.=23.9

LIMIT OF PAVEMENT OVERLAY (TYP)

TBM – SPIKE EL=30.76

PSMH 9

15" RCP

6.00'

B-310

B-311

17+00

PSMH 11

B-309

B-309A

B-308

B-307

B-306

12+00

13+00

14+00

15+00

3.17'

28.00'

6.00'

PW

PS

UGU

OHU

INV.=16.5

15" RCP INV.=22.7

12" CDP INV.=24.5

REMOVE EXISTING GRANITE CURB.

24" RCP

TBM – TOP OF CONCRETE AT CURTAIN WALL EL=33.02

24" RCP INV.=19.9

12" CDP INV.=21.6

24" RCP INV.=20.9

PSNH 4 30A

NHHB

PSMH 8

15" RCP INV.=20.4

L.A.R.O.W.

COORDINATE POLE SUPPORT WITH UTILITY

CONSTRUCT 60 FT. x 24" SLEEVE FOR SEWER UNDER RAMP

US ROUTE 4 EB ON RAMP

INSTALL DOUBLE SILT BARRIER AT WORK LIMITS FOR EROSION CONTROL (TYP)

INV.=22.2

CONSTRUCT TWO 100 FOOT LONG SLEEVES – 24" SLEEVE FOR SEWER AND 16" SLEEVE FOR WATER UNDER OVERPASS

CONSTRUCT TEMPORARY 1.5:1 SLOPE DURING CONSTRUCTION OF WATER AND SEWER. RESTORE SLOPE TO ORIGINAL SLOPE AND CONSTRUCTION AFTER COMPLETION OF WORK.

PROVIDE CATCH BASIN INSERT FOR EROSION CONTROL

US ROUTE 4

CONCRETE BRIDGE ABUTMENT

WIDEN PAVEMENT AND BASE GRAVELS TO 28 FEET AND INSTALL SLOPED GRANITE CURB. COORDINATE EXTENT OF WIDENING WITH NHDOT.

LIMIT OF PAVEMENT OVERLAY / NEW PAVEMENT AND CURB. MILL EDGE AND PROVIDE 1 IN 10 TRANSITION FROM NEW PAVEMENT TO EXISTING PAVEMENT (TYP)

TAPER EDGE OF PAVEMENT AT MAX. 20:1 TO MEET EXISTING EDGE OF PAVEMENT.

US ROUTE 4 WB OFF RAMP

CONSTRUCT 80 FT. x 24" SLEEVE FOR SEWER UNDER RAMP

INSTALL DOUBLE SILT BARRIER AT WORK LIMITS FOR EROSION CONTROL (TYP)

L.A.R.O.W.

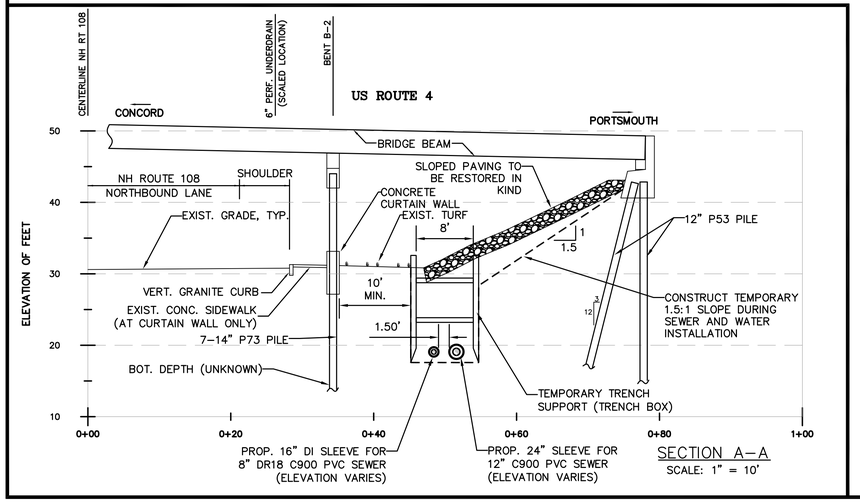

SECTION A–A
SCALE: 1" = 10'

LEGEND:

AC	ASBESTOES CONCRETE.
C.A.R.O.W.	CONTROLLED ACCESS RIGHT–OF–WAY
CMP	CORRUGATED METAL PIPE
CONC.	CONCRETE
DIA.	DIAMETER
EOP	EDGE OF PAVEMENT
HDPE	HIGH DENSITY POLYPROPYLENE
INV.	INVERT
L.A.R.O.W.	LIMITED ACCESS RIGHT–OF–WAY
PCB	PROPOSED CATCH BASIN
PDMH	PROPOSED DRAIN MANHOLE
PSMH	PROPOSED SEWER MANHOLE
PVC	POLYVINYL CHLORIDE
RCP	REINFORCED CONCRETE PIPE
R.O.W.	RIGHT–OF–WAY
SMH	SEWER MANHOLE
TBM	TEMPORARY BENCH MARK
	EXISTING CATCH BASIN
	EXISTING WATER VALVE
	PROPOSED WATER GATE VALVE
	HYDRANT
	SEWER MANHOLE
B–302	TEST BORING LOCATION AND DESIGNATION
	UTILITY POLE AND GUY WIRE
	WATER SHUT OFF

34	EXISTING CONTOUR
D	EXISTING DRAINAGE
FM	EXISTING FORCE MAIN
G	EXISTING GAS
S	EXISTING SEWER
W	EXISTING WATER
34	PROPOSED CONTOUR
	PROPOSED EROSION CONTROL
PFM	PROPOSED FORCE MAIN
OHU	OVERHEAD UTILITIES
PS	PROPOSED SEWER
PW	PROPOSED WATER
	WETLAND

SEWER PIPE SCHEDULE

BEGIN	END	SIZE	LENGTH	MATERIAL
EX. SMH AT PUMP STATION	PSMH 1	12"	104'	SDR 35 PVC
PSMH 1	PSMH 2	12"	83'	SDR 35 PVC
PSMH 2	PSMH 3	12"	254'	CLASS 52 DUCTILE IRON
PSMH 3	PSMH 4	12"	43'	D21 C900 PVC
PSMH 4	PSMH 5	12"	163'	D21 C900 PVC
PSMH 5	PSMH 6	12"	295'	SDR 35 PVC
PSMH 6	PSMH 7	12"	166'	D21 C900 PVC
PSMH 7	PSMH 8	12"	58'	D21 C900 PVC
PSMH 8	PSMH 9	12"	123'	D21 C900 PVC
PSMH 9	PSMH 10	12"	288'	D21 C900 PVC
PSMH 10	PSMH 11	12"	125'	D21 C900 PVC
PSMH 11	PSMH 12	10"	91'	SDR 35 PVC
PSMH 12	PSMH 13	10"	62'	SDR 35 PVC
PSMH 13	PSMH 14	10"	165'	SDR 35 PVC
PSMH 14	BUILDING ENVELOPE	10"	68'	SDR 35 PVC

GRAPHIC SCALE

20 0 10 20 40 80

(IN FEET)
1 inch = 20 ft.

ALTUS ENGINEERING, INC.
133 COURT STREET PORTSMOUTH, NH 03801
VOICE: (603) 433-2335
FAX: (603) 433-4194

STATE OF NEW HAMPSHIRE
JEFFREY K. CLIFFORD
No. 6524
LICENSED PROFESSIONAL ENGINEER

ISSUED FOR:
FINAL TOWN APPROVAL

ISSUE DATE:
MAY 23, 2018

REVISIONS

NO.	DESCRIPTION	BY	DATE
0	INITIAL SUBMISSION	JKC	03/22/18
1	BID SET	JKC	04/02/18
2	100% C.D.	JKC	04/13/18
3	ADDENDUM 1	JKC	04/24/18
4	FINAL TOWN APPROVAL	JKC	5/23/18

DRAWN BY: DMM
APPROVED BY: JKC
DRAWING FILE: 4836.51_SEWER.DWG

SCALE: 1 " = 20'

LAND OWNER – SUBJECT PARCEL:
RIVERWOODS DURHAM
5 WHITE OAK DRIVE
EXETER, NH 03833

APPLICANT:
THE RIVERWOODS GROUP
5 WHITE OAK DRIVE
EXETER, NH 03833

PROJECT:
RIVERWOODS DURHAM
STONE QUARRY DRIVE
DURHAM, NH

TITLE:
OFF–SITE UTILITY ENLARGEMENT PLAN C

SHEET NUMBER:
C - 4.6

P4836.51

TBM – RIM OF CATCH BASIN EL=35.48

INV.=31.6

PROVIDE CATCH BASIN INSERT FOR EROSION CONTROL

2" U.D.

B-311

B-310

17+00

UGU

PSMH 11

28.00'

6.00'

24" RCP

18+00

19+00

24" RCP INV.=20.9

US ROUTE 4 WB OFF RAMP

L.A.R.O.W.

C.A.R.O.W.

EOP

UPON EXTENSION OF MUNICIPAL SEWER ABANDON EXISTING SEPTIC TANK. TANK SHALL BE PUMP OUT BY LICENSED SEPTAGE HAULER AND PUMP SYSTEM REMOVED; FORCE MAIN SHALL BE REMOVED OR CAPPED WHERE REQUIRED; STRUCTURE SHALL BE DEMOLISHED 3 FEET BELOW GRADE AND BACK FILLED WITH COMPACTED CLEAN FILL.

PROVIDE CATCH BASIN INSERT FOR EROSION CONTROL

PROPOSED 8" C900 PVC WATER

GUY POLE & WIRE

INSTALL 8x8x8 TEE AND (3) GATE VALVES

PROJECTED E.O.P. LINE

EOP

APPROX. END OF EXISTING WATER SERVICE. CONNECT OFFICE TO WATER MAIN

SEPTIC TANK & PUMP

EXISTING BUILDING

EXISTING BUILDING

(APPROX.LOC.)

DUMPSTER

EXTEND EXIST. 4" DYL STRIPING TO NEW STOP BAR

RE-STRIPE NEW 18" SSLW(T) STOP BAR 10' FROM PROJECTED E.O.P.

EXIST. STOP BAR TO BE REMOVED

REPLACE EXISTING STOP SIGN WITH 36"x36" STOP SIGN

PROPOSED HYDRANT

DYL

INSTALL DOUBLE SILT BARRIER AT WORK LIMITS FOR EROSION CONTROL (TYP)

PROTECT TWO LARGE TREES. INSTALL ORANGE CONSTRUCTION FENCING AND HAY BALE TO SET LIMIT OF DISTURBANCE. ENGAGE AN APPROVED ARBORIST TO ASSESS THE TREES AND RECOMMEND BEST PRACTICES.

PSMH 12

PSMH 13

PROTECT FOUNDATION OF EXISTING BUILDING DURING CONSTRUCTION. REFER TO GEOTECHNICAL REPORT FOR RECOMMENDATIONS.

MAINTAIN WATER AND SEWER SERVICE TO EXISTING OFFICE AND MARKETING CENTER UNTIL CONNECTION CAN BE MADE TO NEW GRAVITY SEWER AND WATERMAIN. COORDINATE SHORT TERM OUTAGES WITH OCCUPANTS.

MANMADE CHANNEL

PROPOSED 30' WIDE EASEMENT

SEE SHEET C-5.4 FOR PROPOSED GRADING

PROPOSED 8" C900 PVC WATER. SEE SHEET C-4.0 FOR CONTINUATION.

EXISTING DRIVEWAY

12" CMP IN 47.00' OUT 45.64'

UPON EXTENSION OF MUNICIPAL WATER; ABANDON EXISTING DUG WELL. WELL SHALL BE FILLED AND SEALED BY PLACING CLEAN FILL MATERIAL FREE OF ORGANIC MATTER INTO THE WELL. THE UPPER TWO FEET SHALL BE FILLED WITH IMPERVIOUS MATERIAL SUCH AS CLAY OR HARDPAN AND SLIGHTLY MOUNDED TO PROHIBIT SURFACE WATER RUNOFF FROM ENTERING THE FILLED EXCAVATION. EXISTING WATER LINE SHALL BE REMOVED OR CAPPED WHERE REQUIRED.

PSMH 14

UPON EXTENSION OF MUNICIPAL SEWER ABANDON EXISTING LEACH FIELD. REMOVE ALL COMPONENTS OF LEACH FIELD SYSTEM AND PROPERLY DISPOSED AT SOLID WASTE FACILITY.

EXISTING SEPTIC LEACH BED

20+00

21+00

CONTINUES TO BUILDING SEE SHEET C-4.0

LEGEND:

AC	ASBESTOES CONCRETE.
C.A.R.O.W.	CONTROLLED ACCESS RIGHT-OF-WAY
CMP	CORRUGATED METAL PIPE
CONC.	CONCRETE
DIA.	DIAMETER
EOP	EDGE OF PAVEMENT
HDPE	HIGH DENSITY POLYPROPYLENE
INV.	INVERT
L.A.R.O.W.	LIMITED ACCESS RIGHT-OF-WAY
PCB	PROPOSED CATCH BASIN
PDMH	PROPOSED DRAIN MANHOLE
PSMH	PROPOSED SEWER MANHOLE
PVC	POLYVINYL CHLORIDE
RCP	REINFORCED CONCRETE PIPE
R.O.W.	RIGHT-OF-WAY
SMH	SEWER MANHOLE
TBM	TEMPORARY BENCH MARK
	EXISTING CATCH BASIN
	EXISTING WATER VALVE
	PROPOSED WATER GATE VALVE
	HYDRANT
	SEWER MANHOLE
B-302	TEST BORING LOCATION AND DESIGNATION
	UTILITY POLE AND GUY WIRE
	WATER SHUT OFF
34	EXISTING CONTOUR
D	EXISTING DRAINAGE
FM	EXISTING FORCE MAIN
G	EXISTING GAS
S	EXISTING SEWER
W	EXISTING WATER
34	PROPOSED CONTOUR
	PROPOSED EROSION CONTROL
PFM	PROPOSED FORCE MAIN
OHU	OVERHEAD UTILITIES
PS	PROPOSED SEWER
PW	PROPOSED WATER
	WETLAND

GRAPHIC SCALE

20 0 10 20 40 80

(IN FEET)
1 inch = 20 ft.

P4836.51

ALTUS ENGINEERING, INC.
133 COURT STREET PORTSMOUTH, NH 03801
VOICE: (603) 433-2335
FAX: (603) 433-4194

STATE OF NEW HAMPSHIRE · JEFFREY K. CLIFFORD No. 6524 · LICENSED PROFESSIONAL ENGINEER

ISSUED FOR:
FINAL TOWN APPROVAL

ISSUE DATE:
MAY 23, 2018

REVISIONS

NO.	DESCRIPTION	BY	DATE
0	BID SET	JKC	04/02/18
1	100% C.D.	JKC	04/13/18
2	ADDENDUM 1	JKC	04/24/18
3	FINAL TOWN APPROVAL	JKC	5/23/18

DRAWN BY: DMM
APPROVED BY: JKC
DRAWING FILE: 4836.51_SEWER.DWG

SCALE: 1 " = 20'

LAND OWNER – SUBJECT PARCEL:
RIVERWOODS DURHAM
5 WHITE OAK DRIVE
EXETER, NH 03833

APPLICANT:
THE RIVERWOODS GROUP
5 WHITE OAK DRIVE
EXETER, NH 03833

PROJECT:
RIVERWOODS DURHAM
STONE QUARRY DRIVE
DURHAM, NH

TITLE:
OFF-SITE UTILITY ENLARGEMENT PLAN D

SHEET NUMBER:
C - 4.7

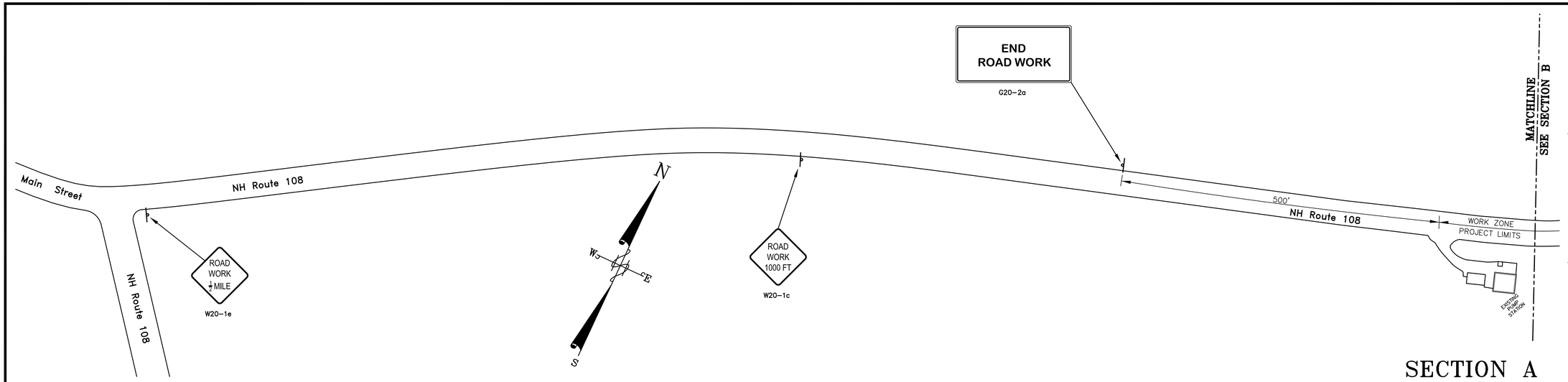

SECTION A

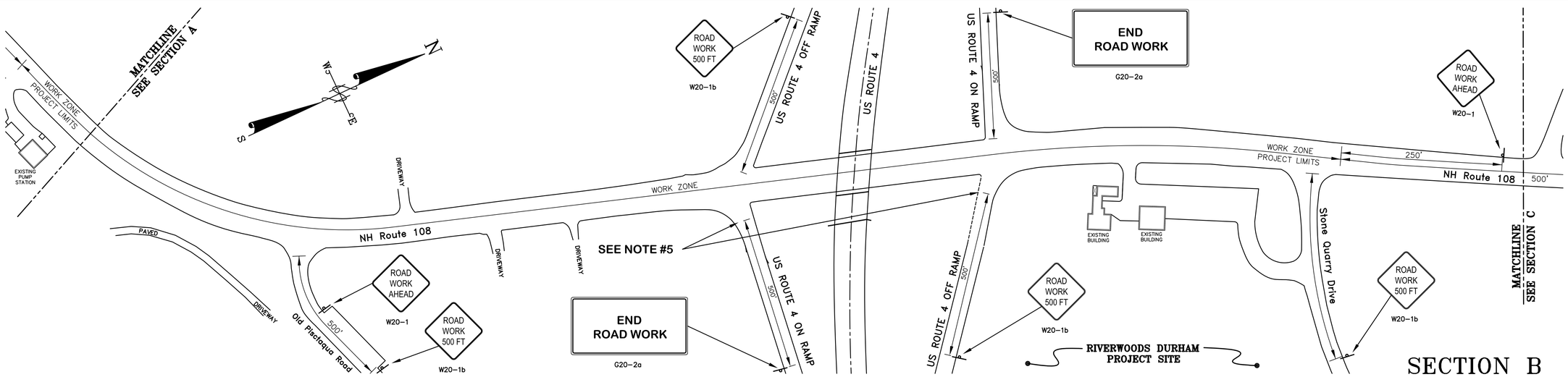

SECTION B

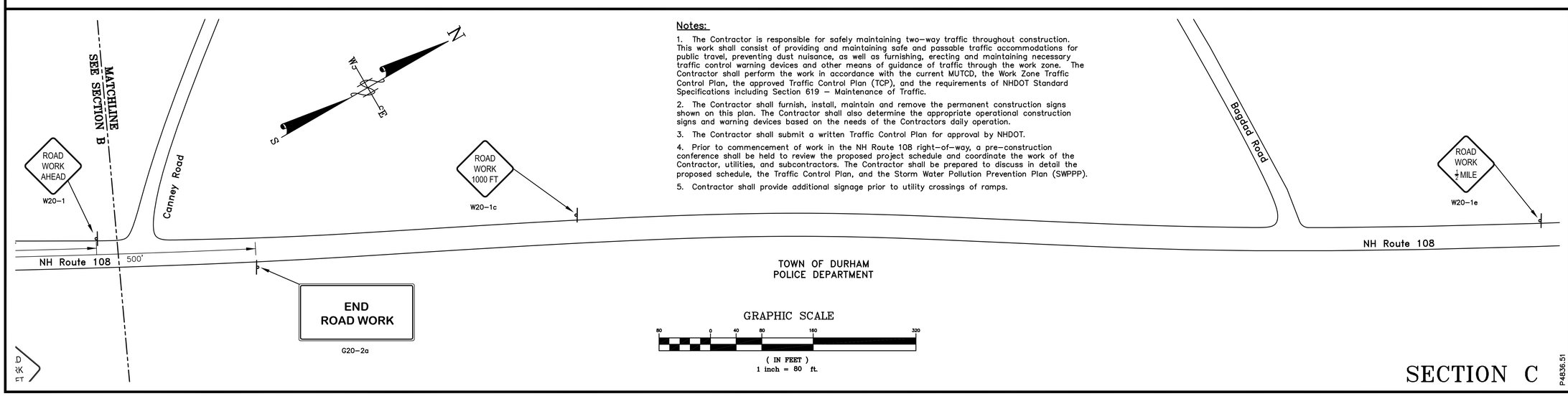

Notes:

1. The Contractor is responsible for safely maintaining two–way traffic throughout construction. This work shall consist of providing and maintaining safe and passable traffic accommodations for public travel, preventing dust nuisance, as well as furnishing, erecting and maintaining necessary traffic control warning devices and other means of guidance of traffic through the work zone. The Contractor shall perform the work in accordance with the current MUTCD, the Work Zone Traffic Control Plan, the approved Traffic Control Plan (TCP), and the requirements of NHDOT Standard Specifications including Section 619 – Maintenance of Traffic.
2. The Contractor shall furnish, install, maintain and remove the permanent construction signs shown on this plan. The Contractor shall also determine the appropriate operational construction signs and warning devices based on the needs of the Contractors daily operation.
3. The Contractor shall submit a written Traffic Control Plan for approval by NHDOT.
4. Prior to commencement of work in the NH Route 108 right–of–way, a pre–construction conference shall be held to review the proposed project schedule and coordinate the work of the Contractor, utilities, and subcontractors. The Contractor shall be prepared to discuss in detail the proposed schedule, the Traffic Control Plan, and the Storm Water Pollution Prevention Plan (SWPPP).
5. Contractor shall provide additional signage prior to utility crossings of ramps.

TOWN OF DURHAM
POLICE DEPARTMENT

GRAPHIC SCALE

80 0 40 80 160 320

(IN FEET)
1 inch = 80 ft.

SECTION C

P4836.51

ALTUS ENGINEERING, INC.
133 COURT STREET PORTSMOUTH, NH 03801
VOICE: (603) 433-2335
FAX: (603) 433-4194

STATE OF NEW HAMPSHIRE
JEFFREY K. CLIFFORD
No. 6524
LICENSED PROFESSIONAL ENGINEER

ISSUED FOR:
FINAL TOWN APPROVAL

ISSUE DATE:
MAY 23, 2018

REVISIONS

NO.	DESCRIPTION	BY	DATE
0	NHDOT SUBMISSION	JKC	4/05/18
1	100% CD	JKC	4/13/18
2	FINAL TOWN APPROVAL	JKC	5/23/18

DRAWN BY: RMB
APPROVED BY: JKC
DRAWING FILE: 4836.51SIGNAGE.DWG

SCALE:
1 " = 80'

LAND OWNER – SUBJECT PARCEL:
RIVERWOODS DURHAM
5 WHITE OAK DRIVE
EXETER, NH 03833

APPLICANT:
THE RIVERWOODS GROUP
5 WHITE OAK DRIVE
EXETER, NH 03833

PROJECT:
RIVERWOODS DURHAM
STONE QUARRY DRIVE
DURHAM, NH

TITLE:
WORK ZONE
TRAFFIC SIGNS

SHEET NUMBER:
C - 4.8

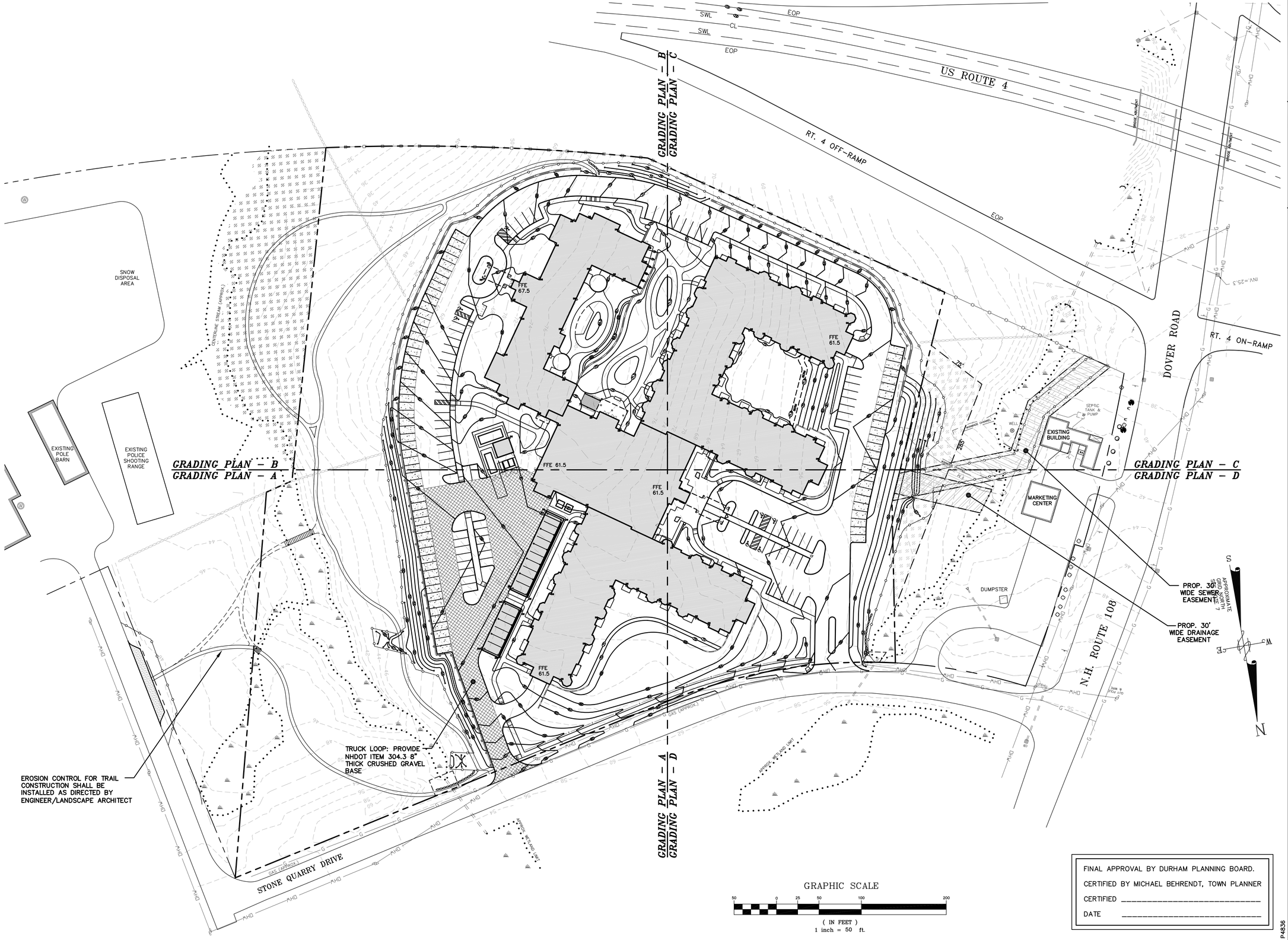

GRAPHIC SCALE

50 0 25 50 100 200

(IN FEET)
1 inch = 50 ft.

FINAL APPROVAL BY DURHAM PLANNING BOARD.
CERTIFIED BY MICHAEL BEHRENDT, TOWN PLANNER
CERTIFIED _____
DATE _____

P4836

ALTUS ENGINEERING, INC.
133 COURT STREET PORTSMOUTH, NH 03801
VOICE: (603) 433-2335
FAX: (603) 433-4194

STATE OF NEW HAMPSHIRE
JEFFREY K. CLIFFORD
No. 6524
LICENSED PROFESSIONAL ENGINEER

ISSUED FOR:
FINAL TOWN APPROVAL

ISSUE DATE:
MAY 23, 2018

REVISIONS

NO.	DESCRIPTION	BY	DATE
0	INITIAL SUBMISSION	JKC	7/19/17
1	PB RE-SUBMISSION	JKC	10/16/17
2	PB RE-SUBMISSION	JKC	12/05/17
3	100% D.D.	JKC	12/22/17
4	NHDES AoT SUBMISSION	JKC	1/18/18
5	50% C.D.	JKC	2/16/18
6	PERMIT SET	JKC	3/16/18
7	BID SET	JKC	4/02/18
8	100% C.D.	JKC	4/13/18
9	ADDENDUM 1	JKC	4/24/18
10	FINAL TOWN APPROVAL	JKC	5/23/18

DRAWN BY: RMB
APPROVED BY: JKC
DRAWING FILE: 4836SITE.DWG

SCALE: 1 " = 50'

LAND OWNER – SUBJECT PARCEL:

RIVERWOODS DURHAM
5 WHITE OAK DRIVE
EXETER, NH 03833

APPLICANT:

THE RIVERWOODS GROUP
5 WHITE OAK DRIVE
EXETER, NH 03833

PROJECT:

RIVERWOODS DURHAM
STONE QUARRY DRIVE
DURHAM, NH

TITLE:

OVERALL GRADING PLAN

SHEET NUMBER:

C - 5.0

PROPOSED DRAINAGE SCHEDULE

PDMH #1
RIM: 56.80
IN: 52.00 [12" CPE, PCB #2]
IN: 53.50 [15" CPE, PDMH #3]
OUT: 49.20 [DAYLIGHT]
15" CPE, L=40'±, S=0.0050'/'
OUTFALL W/MFES, ELEV= 49.00

PUSF #1A
IN: 53.00 [6" PERF. U.D.]
OUT 49.83 [6" CPE]
WYE CONNECTION W/15" CPE

PCB #2 (TYPE 1)
RIM: 57.00
OUT: 52.35 [PDMH #1]
12" CPE, L=35'±, S=0.0100'/'

PDMH #3
RIM: 57.90
[SEE SHEET C-5.7 FOR DETAILS]
OUT: 53.60 [PDMH #1]
15" CPE, L=19'±, S=0.0058'/'

PDMH #4
RIM: 57.85
IN: 53.61 [15" CPE, PCB #5]
[SEE SHEET C-5.7 FOR DETAILS]

PCB #5 (TYPE 1)
RIM: 56.80
IN: 53.95 [12" CPE, PDI #6]
IN: 53.95 [12" CPE, PDI #7]
OUT: 53.71 [PDMH #4]
15" CPE, L=19'±, S=0.0053'/'

PDI #6 (W/GRATE & 4' SUMP)
RIM: 56.25
OUT: 54.10 [PCB #5]
12" CPE, L=23'±, S=0.0061'/'

PDI #7
RIM: 57.15
IN: 54.15 [10" PVC, PAD #92]
OUT: 54.05 [PCB #5]
12" CPE, L=20'±, S=0.0050'/'

PDMH #8
RIM: 49.75
IN: 45.25 [24" CPE, PCB #8A]
OUT: 44.15 [DAYLIGHT]
24" CPE, L=25'±, S=0.0060'/'
OUTFALL W/MFES, ELEV=44.00

PCB #8A (5'ø, TYPE 2)
RIM: 59.38
IN: 51.75 [24" CPE, PDMH #9]
IN: 53.20 [12" CPE, PCB #33]
IN: 48.00 [6" CPE, PUSF #9A]
OUT: 46.50 [PDMH #8]
24" CPE, L=29'±, S=0.0431'/'

PUSF #9A
IN: 51.50 [6" PERF. U.D.]
OUT 48.33 [6" CPE, PCB #8A]

PDMH #9
RIM: 59.57
[SEE SHEET C-5.7 FOR DETAILS]
OUT: 51.90 [PCB #8A]
24" CPE, L=18'±, S=0.0083'/'

PDMH #10
RIM: 59.95
IN: 54.30 [18" CPE, PDMH #11]
[SEE SHEET C-5.7 FOR DETAILS]

PDMH #11 (5' DIA.)
RIM: 60.11
IN: 56.50 [12" CPE, PCB #12]
IN: 55.35 [15" CPE, PAD #13]
IN: 54.85 [12" CPE, PCB #17]
OUT: 54.35 [PDMH #10]
18" CPE, L=7'±, S=0.0071'/'

PCB #12 (TYPE 1)
RIM: 59.75
OUT: 56.75 [PDMH #11]
12" CPE, L=46'±, S=0.0054'/'

PAD #13
RIM: 60.85
IN: 55.80 [12" CPE, PAD #13A]
IN: 56.15 [8" PVC, PAD #91]
OUT: 55.55 [PDMH #11]
15" CPE, L=34'±, S=0.0059'/'

PAD #13A
RIM: 60.85
IN: 56.30 [12" CPE, PDI #14]
IN: 57.85 [6" PVC, D.S.]
OUT: 56.20 [PAD #13]
12" CPE, L=49'±, S=0.0082'/'

PDI #14
RIM: 60.85
IN: 56.70 [12" CPE, PAD #15]
IN: 58.35 [6" PVC, D.S.]
IN: 57.50 [6" PVC, R.L.]
OUT: 56.60 [PAD #13A]
12" CPE, L=52'±, S=0.0058'/'

PAD #15
RIM: 60.80
IN: 57.20 [10" PVC, PAD #16]
IN: 58.20 [6" PVC, D.S.]
OUT 57.05 [PDI #14]
12" CPE, L=61'±, S=0.0057'/'

PAD #16 (SOLID COVER)
RIM: 61.00
IN: 58.50 [6" PVC, D.S.]
IN: 57.70 [6" PVC, R.L.]
OUT: 57.35 [PAD #15]
10" PVC, L=26'±, S=0.0058'/'

PCB #17 (TYPE 1)
RIM: 59.67
IN: 55.15 [12" CPE, PCB #18]
IN: 59.50 [6" PVC, D.S.]
OUT: 55.05 [PDMH #11]
12" CPE, L=29'±, S=0.0069'/'

PCB #18 (TYPE 1)
RIM: 58.85
IN: 55.60 [12" CPE, PCB #19]
OUT: 55.50 [PCB #17]
12" CPE, L=64'±, S=0.0055'/'

PCB #19 (TYPE 1)
RIM: 59.55
OUT: 56.25 [PCB #18]
12" CPE, L=38'±, S=0.0171'/'

PCB #33 (TYPE 1)
RIM: 58.10
IN: 53.90 [12" CPE, PCB #34]
OUT: 53.80 [PCB #8A]
12" CPE, L=114'±, S=0.0053'/'

PAD #91
RIM: 60.80
IN: 57.80 [6" PVC, D.S.]
IN: 56.55 [6" PVC, F.D.]
OUT: 56.40 [PAD #13]
8" PVC, L=42'±, S=0.0060'/'

PAD #92
RIM: 60.70
IN: 58.30 [10" D.I., PAD #93
IN: 58.80 [6" PVC, WALL U.D.]
OUT: 58.20 [PDI #7]
10" PVC, L=35'±, S=0.1157'/'

PAD #93 (DOME GRATE)
RIM: 71.00
IN: 67.90 [8" PVC, PAD #94]
IN: 68.50 [6" PVC, D.S.]
IN: 66.50 [6" PVC, WALL U.D.]
OUT: 64.50 [PAD #92]
10" D.I., L=42'±, S=0.1476'/'

PAD #94 (SOLID COVER)
RIM: 71.10
IN: 68.10 [8" PVC, PAD #95]
IN: 68.60 [6" PVC, D.S.]
OUT: 68.00 [PAD #93]
8" PVC, L=19'±, S=0.0053'/'

PAD #95 (SOLID COVER)
IN: 71.60
IN: 69.20 [6" PVC, D.S.]
IN: 69.20 [6" PVC, D.S.]
OUT: 69.05 [PAD #94]
8" PVC, L=110'±, S=0.0086'/'
OUT: 69.05 [PAD #106]
8" PVC, L=125'±, S=0.0052'/'

KEY NOTES

1. INSTALL POROUS PAVEMENT (EAST)
2. INSTALL UNDERGROUND SAND FILTER (USF); CONNECT SMG U.D. TO USF
3. INSTALL STORMWATER MANAGEMENT GALLERY (SMG A); STORMTECH SC-740 SYSTEM, 4 ROWS OF 10 CHAMBERS (SEE SHEETS C-5.5 AND C-5.7 FOR DETAILS)
4. INSTALL STORMWATER MANAGEMENT GALLERY (SMG B); STORMTECH MC-3500 SYSTEM, 5 ROWS OF 25 CHAMBERS (SEE SHEETS C-5.5 AND C-5.7 FOR DETAILS)
5. CONNECT ROOF LEADER TO 6" PVC DRAIN LINE (SEE ARCH. AND MEP DWG.S)
6. CONNECT DOWNSPOUT VIA 6" PVC DRAIN TO STORMWATER STRUCTURE OR PIPE W/MANUF'S CONNECTION, TYP. (SEE ARCH. AND MEP DWG.S)
7. INSTALL UNDERDRAIN DETAIL TYPE B
8. INSTALL PLUNGE POOL AT OUTFALL
9. CONSTRUCT RETAINING WALL; TOP OF WALL ELEV. 70.5
10. UTILITY POLE SHALL BE SUPPORTED DURING DRAINAGE INSTALLATION, AS NECESSARY

NOTE:

1. SEE LANDSCAPE ARCHITECT PLANS FOR MAINTENANCE STRIP LOCATIONS AT BUILDING AND DETAIL.
2. REFER TO MEP/ARCH DRAWINGS FOR DOWNSPOUTS, ROOF LEADERS AND CONNECTION TO CLOSED DRAINAGE SYSTEM.
3. REFER TO MEP/ARCH DRAWINGS FOR SLAB UNDERDRAINS AND FOOTING DRAINS.

GRAPHIC SCALE

20 0 10 20 40 80

(IN FEET)
1 inch = 20 ft.

SEE GRADING PLAN – B
MATCH LINE

MATCH LINE
SEE GRADING PLAN – D

FINAL APPROVAL BY DURHAM PLANNING BOARD.
CERTIFIED BY MICHAEL BEHRENDT, TOWN PLANNER
CERTIFIED _____
DATE _____

P4836

ALTUS ENGINEERING, INC.
133 COURT STREET PORTSMOUTH, NH 03801
VOICE: (603) 433-2335
FAX: (603) 433-4194

JEFFREY K. CLIFFORD No. 6524 LICENSED PROFESSIONAL ENGINEER STATE OF NEW HAMPSHIRE

ISSUED FOR:
FINAL TOWN APPROVAL

ISSUE DATE:
MAY 23, 2018

REVISIONS

NO.	DESCRIPTION	BY	DATE
0	INITIAL SUBMISSION	JKC	7/19/17
1	PB RE-SUBMISSION	JKC	10/16/17
2	PB RE-SUBMISSION	JKC	12/05/17
3	100% D.D.	JKC	12/22/17
4	NHDES AoT SUBMISSION	JKC	1/18/18
5	50% C.D.	JKC	2/16/18
6	PERMIT SET	JKC	3/16/18
7	BID SET	JKC	4/02/18
8	100% C.D.	JKC	4/13/18
9	ADDENDUM 1	JKC	4/24/18
10	FINAL TOWN APPROVAL	JKC	5/23/18

DRAWN BY: RMB
APPROVED BY: JKC
DRAWING FILE: 4836SITE.DWG

SCALE: 1 " = 20'

LAND OWNER – SUBJECT PARCEL:
RIVERWOODS DURHAM
5 WHITE OAK DRIVE
EXETER, NH 03833

APPLICANT:
THE RIVERWOODS GROUP
5 WHITE OAK DRIVE
EXETER, NH 03833

PROJECT:
RIVERWOODS DURHAM
STONE QUARRY DRIVE
DURHAM, NH

TITLE:
GRADING PLAN – A

SHEET NUMBER:
C - 5.1

PROPOSED DRAINAGE SCHEDULE

PDMH #20 (5' DIA.)
RIM: 60.00
IN: 56.50 [10" PVC, PDI #20A]
IN: 54.30 [18" CPE, PCB #21]
[SEE SHEET C-5.7 FOR DETAILS]

PDI #20A
RIM: 61.15
OUT: 57.40 [PDMH #20]
10" PVC, L=29'±, S=0.0310'/'

PCB #21 (TYPE 2)
RIM: 62.70
IN: 55.60 [12" CPE, PCB #22]
IN: 55.20 [18" CPE, PCB #25]
OUT: 55.10 [PDMH #20]
18" CPE, L=83'±, S=0.0096'/'

PCB #22 (TYPE 2)
RIM: 60.50
IN: 57.50 [6" PVC, D.S.]
IN: 56.40 [6" PVC, F.D.]
IN: 57.50 [6" PVC, D.S.]
IN: 56.05 [10" PVC, PAD #23]
OUT: 55.90 [PCB #21]
12" CPE, L=56'±, S=0.0054'/'

PAD #23
RIM: 60.70
IN: 57.25 [8" PVC, PAD #24]
IN: 57.70 [6" PVC, D.S.]
IN: 57.70 [6" PVC, D.S.]
OUT: 57.10 [PCB #22]
10" PVC, L=22'±, S=0.0477'/'

PAD #24
RIM: 60.50
IN: 57.50 [6" PVC, D.S.]
OUT: 57.35 [PAD #23]
8" PVC, L=20'±, S=0.0050'/'

PCB #25 (TYPE 2)
RIM: 65.25
IN: 59.10 [18" CPE, PCB #26]
IN: 60.00 [6" PVC, F.D.]
IN: 62.25 [6" PVC, R.L.]
OUT: 59.00 [PCB #21]
18" CPE, L=52'±, S=0.0731'/'

PCB #26 (TYPE 2)
RIM: 66.00
IN: 61.75 [15" CPE, PCB #27]
IN: 62.00 [12" CPE, PCB #49]
OUT: 60.50 [PCB #25]
18" CPE, L=118'±, S=0.0119'/'

PCB #27 (TYPE 2)
RIM: 69.10
IN: 65.00 [12" CPE, PCB #28]
IN: 64.85 [12" CPE, PDI #29]
OUT: 64.75 [PCB #26]
15" CPE, L=70'±, S=0.0429'/'

PCB #28 (TYPE 1)
RIM: 68.70
OUT: 65.20 [PCB #27]
12" CPE, L=34'±, S=0.0059'/'

PDI #29
RIM: 69.50
IN: 65.80 [12" CPE, PDI #30]
OUT: 65.70 [PCB #27]
12" CPE, L=37'±, S=0.0230'/'

PDI #30
RIM: 69.50
IN: 66.15 [10" PVC, PAD #32]
IN: 67.00 [6" PVC, U.D.]
OUT: 66.00 [PDI #29]
12" CPE, L=38'±, S=0.0053'/'

PAD #31 (DOME GRATE)
RIM: 71.80
IN: 69.30 [6" PVC, D.S.]
IN: 69.30 [6" PVC, U.D.]
IN: 69.30 [6" PVC, D.S.]
OUT: 68.70 [PAD #55]
8" PVC, L=32'±, S=0.0063'/'

PAD #32
RIM: 69.50
IN: 67.00 [6" PVC, WALL U.D.]
OUT: 66.50 [PDI #30]
10" PVC, L=24'±, S=0.0146'/'

PCB #34 (TYPE 1)
RIM: 60.48
IN: 56.55 [12" CPE, PCB #35]
IN: 57.50 [6" PERF. U.D.]
IN: 57.00 [6" PERF. U.D.]
OUT: 55.90 [PCB #33]
12" CPE, L=146'±, S=0.0137'/'

PCB #35 (TYPE 1)
RIM: 63.80
IN: 60.50 [6" PERF. U.D.]
IN: 60.50 [6" PERF. U.D.]
OUT: 58.90 [PCB #34]
12" CPE, L=116'±, S=0.0203'/'

PCB #47 (TYPE 2)
RIM: 71.20
IN: 66.90 [12" CPE, PCB #48]
IN: 68.55 [10" PVC, PAD #99]
OUT: 66.80 [PCB #45]
12" CPE, L=64'±, S=0.0070'/'

PCB #48 (TYPE 2)
RIM: 71.65
IN: 67.25 [12" CPE, PCB #54]
IN: 68.20 [10" PVC, PDI #58]
OUT: 67.15 [PCB #47]
12" CPE, L=46'±, S=0.0054'/'

PCB #49 (TYPE 2)
RIM: 66.75
IN: 62.55 [12" CPE, PDI #50]
IN: 63.75 [6" PVC, D.S.]
IN: 63.75 [6" PVC, D.S]
OUT: 62.45 [PCB #26]
12" CPE, L=82'±, S=0.0055'/'

PDI #50 (ADS 24" PEDESTRIAN GRATE)
RIM: 66.83
IN: 62.75 [12" CPE, PDI #51]
IN: 62.90 [10" PVC, PDI #96]
OUT: 62.65 [PCB #49]
12" CPE, L=16'±, S=0.0063'/'

PDI #51
RIM: 66.20
IN: 63.00 [12" CPE, PDI #52]
OUT: 62.90 [PDI #50]
12" CPE, L=28'±, S=0.0054'/'

PDI #52 (ADS 24" PEDESTRIAN GRATE)
RIM: 66.70
IN: 63.30 [10" PVC, PDI #53]
IN: 63.70 [6" PVC, WALL U.D.]
IN: 63.70 [6" PVC, D.S.]
OUT: 63.15 [PDI #51]
12" CPE, L=26'±, S=0.0058'/'

PDI #53
RIM: 66.00
IN: 64.00 [6" PVC, U.D.]
IN: 63.50 [6" PVC, D.S.]
IN: 63.50 [6" PVC, D.S.]
IN: 64.00 [6" PVC, U.D.]
OUT: 63.40 [PDI #52]
10" PVC, L=12'±, S=0.0083'/'

PCB #54 (TYPE 2)
RIM: 71.10
IN: 67.85 [10" PVC, PAD #55]
IN: 68.00 [8" PVC, PAD #56]
OUT: 67.50 [PCB #48]
12" CPE, L=50'±, S=0.0050'/'

PAD #55
RIM: 71.60
IN: 68.50 [8" PVC, PAD #31]
OUT: 68.40 [PCB #54]
10" PVC, L=39'±, S=0.0141'/'

PAD #56 (DOME GRATE)
RIM: 71.85
IN: 68.65 [8" PVC, PAD #57]
OUT: 68.55 [PCB #54]
8" PVC, L=27'±, S=0.0204'/'

PAD #57 (DOME GRATE)
RIM: 71.85
IN: 69.00 [6" PVC, D.S.]
OUT: 68.85 [PAD #56]
8" PVC, L=36'±, S=0.0056'/'

PDI #58 (ADS 24" PEDESTRAIN GRATE)
IN: 71.65
IN: 68.45 [8" PVC, PAD #60]
IN: 69.15 [6" PVC, D.S.]
IN: 68.45 [8" PVC, PAD #59]
OUT: 68.30 [PCB #48]
10" PVC, L=16'±, S=0.0063'/'

PAD #59 (DOME GRATE)
RIM: 71.80
IN: 69.30 [6" PVC, D.S.]
OUT: 68.80 [PDI #58]
8" PVC, L=26'±, S=0.0135'/'

PAD #60 (DOME GRATE)
RIM: 71.80
IN: 69.30 [6" PVC, D.S.]
OUT: 68.80 [PDI #58]
8" PVC, L=26'±, S=0.0135'/'

PDI #96
RIM: 66.45
IN: 63.60 [6" PVC, D.S.]
IN: 63.60 [6" PVC, D.S.]
IN: 63.45 [8" PVC, PAD #97]
IN: 63.60 [6" PVC, WALL U.D.]
OUT: 63.00 [PDI #50]
10" PVC, L=16'±, S=0.0063'/'

PAD #97
RIM: 66.90
OUT: 63.90 [PDI #96]
8" PVC, L=23'±, S=0.0196'/'

PAD #99 (DOME GRATE)
RIM: 71.75
OUT: 68.75 [PCB #47]
10" PVC, L=26'±, S=0.0077'/'

KEY NOTES

1. INSTALL POROUS PAVEMENT (EAST)
2. INSTALL DRIP STRIP WITH UNDERDRAIN, TYP.
3. CONSTRUCT SEAT WALL W/UNDERDRAIN, ELEV. 64.0 (SEE L.A. DWG.S FOR DETAILS)
4. PROVIDE CONCRETE SPLASH PAD AT ROOF SCUPPER DRAIN
5. CONNECT ROOF LEADER TO 6" PVC DRAIN LINE (SEE ARCH. AND MEP DWG.S)
6. CONNECT DOWNSPOUT VIA 6" PVC DRAIN TO STORMWATER STRUCTURE OR PIPE W/MANUF'S CONNECTION, TYP. (SEE ARCH. AND MEP DWG.S)
7. INSTALL UNDERDRAIN DETAIL TYPE B
8. INSTALL WALL UNDERDRAIN (SEE L.A. DWG.S FOR DETAILS)

NOTE:

1. SEE LANDSCAPE ARCHITECT PLANS FOR MAINTENANCE STRIP LOCATIONS AT BUILDING AND DETAIL.
2. REFER TO MEP/ARCH DRAWINGS FOR DOWNSPOUTS, ROOF LEADERS AND CONNECTION TO CLOSED DRAINAGE SYSTEM.
3. REFER TO MEP/ARCH DRAWINGS FOR SLAB UNDERDRAINS AND FOOTING DRAINS.

GRAPHIC SCALE

20 0 10 20 40 80

(IN FEET)
1 inch = 20 ft.

FINAL APPROVAL BY DURHAM PLANNING BOARD.
CERTIFIED BY MICHAEL BEHRENDT, TOWN PLANNER
CERTIFIED _____
DATE _____

RETAINING WALL LEGEND:
BW #1 XX.XX
TW #2 XX.XX
BW #3 XX.XX

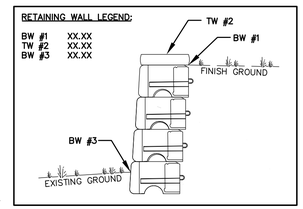

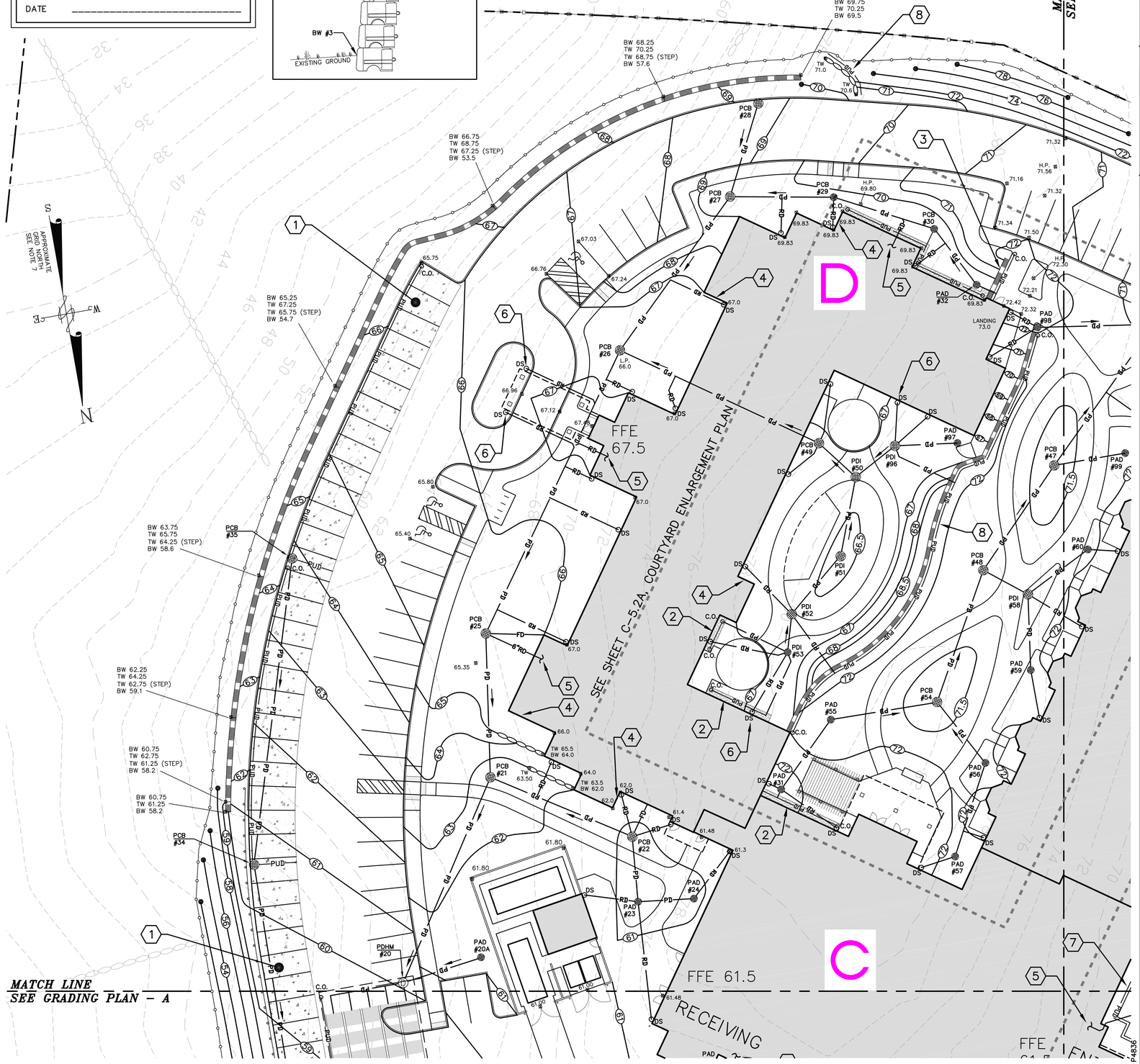

ALTUS ENGINEERING, INC.
133 COURT STREET PORTSMOUTH, NH 03801
VOICE: (603) 433-2355
FAX: (603) 433-4194

STATE OF NEW HAMPSHIRE
JEFFREY K. CLIFFORD No. 6524 LICENSED PROFESSIONAL ENGINEER

ISSUED FOR:
FINAL TOWN APPROVAL

ISSUE DATE:
MAY 23, 2018

REVISIONS

NO.	DESCRIPTION	BY	DATE
0	INITIAL SUBMISSION	JKC	7/19/17
1	PB RE-SUBMISSION	JKC	10/16/17
2	PB RE-SUBMISSION	JKC	12/05/17
3	100% D.D.	JKC	12/22/17
4	NHDES AoT SUBMISSION	JKC	1/18/18
5	50% C.D.	JKC	2/16/18
6	PERMIT SET	JKC	3/16/18
7	BID SET	JKC	4/02/18
8	100% C.D.	JKC	4/13/18
9	ADDENDUM 1	JKC	4/24/18
10	FINAL TOWN APPROVAL	JKC	5/23/18

DRAWN BY: RMB
APPROVED BY: JKC
DRAWING FILE: 4836SITE.DWG

SCALE: 1 " = 20'

LAND OWNER - SUBJECT PARCEL:
RIVERWOODS DURHAM
5 WHITE OAK DRIVE
EXETER, NH 03833

APPLICANT:
THE RIVERWOODS GROUP
5 WHITE OAK DRIVE
EXETER, NH 03833

PROJECT:
RIVERWOODS DURHAM
STONE QUARRY DRIVE
DURHAM, NH

TITLE:
GRADING PLAN - B

SHEET NUMBER:
C - 5.2

P4836

FINAL APPROVAL BY DURHAM PLANNING BOARD.

CERTIFIED BY MICHAEL BEHRENDT, TOWN PLANNER

CERTIFIED _____

DATE _____

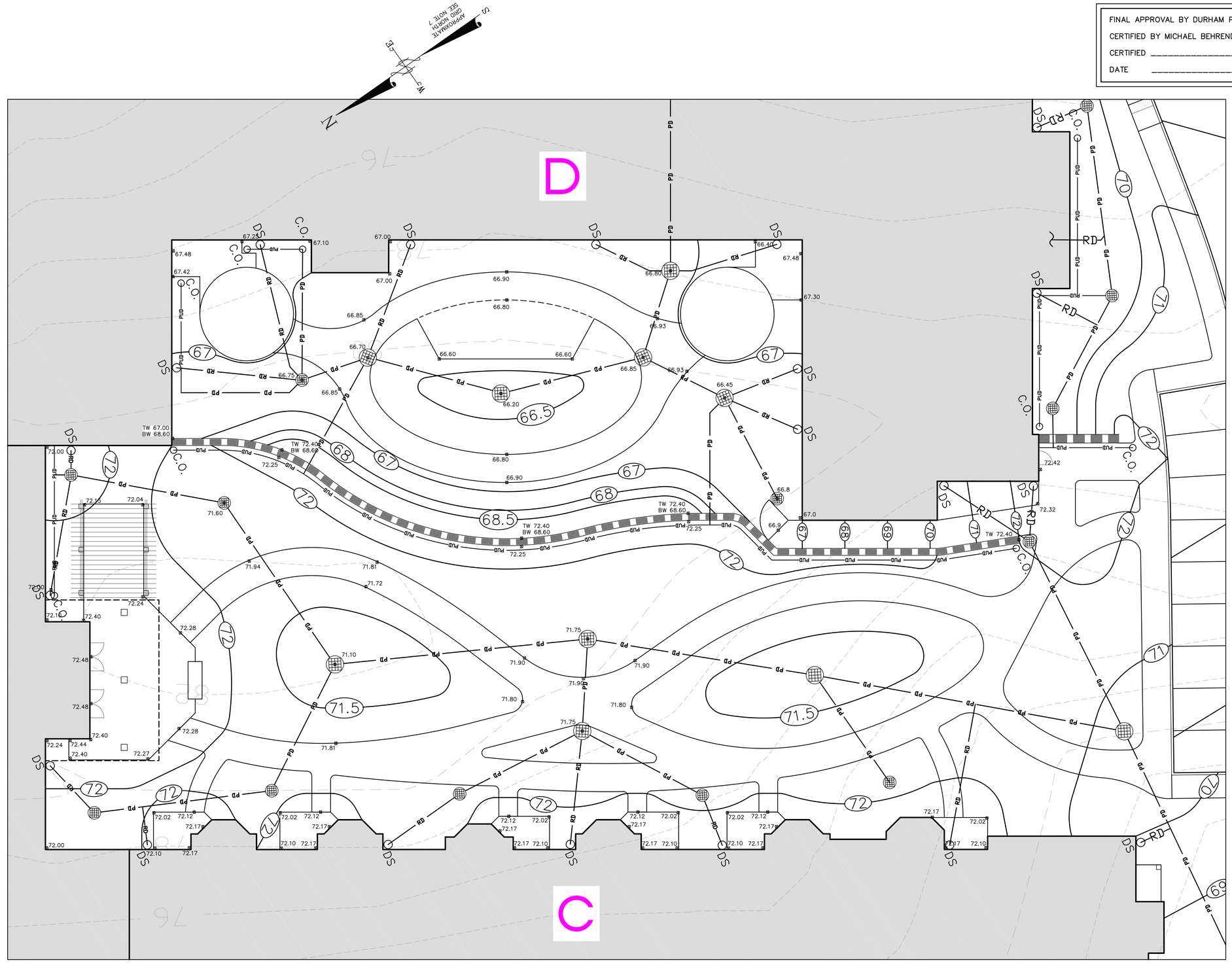

GRAPHIC SCALE

10 0 5 10 20 40

(IN FEET)

1 inch = 10 ft.

ALTUS ENGINEERING, INC.

133 COURT STREET PORTSMOUTH, NH 03801

VOICE: (603) 433-2335

FAX: (603) 433-4194

STATE OF NEW HAMPSHIRE — JEFFREY K. CLIFFORD No. 6524 LICENSED PROFESSIONAL ENGINEER

ISSUED FOR:

FINAL TOWN APPROVAL

ISSUE DATE:

MAY 23, 2018

REVISIONS

NO.	DESCRIPTION	BY	DATE
0	INITIAL SUBMISSION	JKC	2/16/18
1	PERMIT SET	JKC	3/16/18
2	BID SET	JKC	4/02/18
3	100% C.D.	JKC	4/13/18
4	ADDENDUM 1	JKC	4/24/18
5	FINAL TOWN APPROVAL	JKC	5/23/18

DRAWN BY: RMB

APPROVED BY: JKC

DRAWING FILE: 4836SITE.DWG

SCALE: 1 " = 10'

LAND OWNER – SUBJECT PARCEL:

RIVERWOODS DURHAM

5 WHITE OAK DRIVE
EXETER, NH 03833

APPLICANT:

THE RIVERWOODS GROUP

5 WHITE OAK DRIVE
EXETER, NH 03833

PROJECT:

RIVERWOODS DURHAM

STONE QUARRY DRIVE
DURHAM, NH

TITLE:

COURTYARD ENLARGEMENT PLAN

SHEET NUMBER:

C - 5.2A

P4836

PROPOSED DRAINAGE SCHEDULE

PDMH #37
RIM: 60.60
IN: 53.00 [18" CPE, PDMH #37A]
IN: 55.90 [12" CPE, PCB #37B]
IN: 49.50 [6" PVC, PUSF #103]
OUT: 48.50 [PDMH #36]
18" CPE, L=41'±, S=0.0061'/'

PDMH #37A
RIM: 60.60
IN: 56.00 [15" CPE, PDMH #61]
IN: 53.30 [18" CPE, PDMH #38]
OUT: 53.20 [PDMH #37]
18" CPE, L=31'±, S=0.0065'/'

PCB #37B (TYPE 1)
RIM: 59.50
IN: 56.50 [6" PERF. U.D.]
OUT: 56.00 [PDMH #37]
12" CPE, L=5'±, S=0.0200'/'

PDMH #38
RIM: 61.25
IN: 53.75 [18" CPE, PDMH #39]
OUT: 53.65 [PDMH #37A]
18" CPE, L=71'±, S=0.0049'/'

PDMH #39
RIM: 61.00
[SEE SHEET C-5.8 FOR DETAILS]
OUT: 53.90 [PDMH #38]
18" CPE, L=22'±, S=0.0068'/'

PDMH #40
RIM: 61.25
IN: 58.25 [6" PVC, D.S.]
IN: 57.00 [6" PVC, F.D.]
IN: 55.80 [18" CPE, PDMH #41]
[SEE SHEET C-5.8 FOR DETAILS]

PDMH #41
RIM: 61.80
IN: 58.10 [12" CPE, PCB #42]
IN: 58.10 [12" CPE, PCB #43]
IN: 56.30 [15" CPE, PCB #44]
OUT: 56.05 [PDMH #40]
18" CPE, L=42'±, S=0.0060'/'

PCB #42 (TYPE 1)
RIM: 61.80
OUT: 58.20 [PDMH #41]
12" CPE, L=6'±, S=0.0167'/'

PCB #43 (TYPE 1)
RIM: 61.70
OUT: 58.20 [PDMH #41]
12" CPE, L=8'±, S=0.0125'/'

PCB #44 (TYPE 1)
RIM: 67.10
IN: 64.60 [6" PVC, D.S.]
IN: 63.35 [15" CPE, PCB #45]
OUT: 63.25 [PDMH #41]
15" CPE, L=145'±, S=0.0479'/'

PCB #45 (TYPE 2)
RIM: 70.70
IN: 66.35 [12" CPE, PCB #47]
IN: 67.70 [8" PVC, PAD #98]
OUT: 66.10 [PCB #44]
15" CPE, L=69'±, S=0.0399'/'

PCB #46 (NOT USED)

PDMH #61
RIM: 61.00
IN: 56.50 [15" CPE, PDMH #62]
OUT: 56.40 [PDMH #37A]
15" CPE, L=73'±, S=0.0055'/'

PDMH #62
RIM: 71.60
[SEE SHEET C-5.9 FOR DETAILS]
OUT: 65.50 [PDMH #61]
15" CPE, L=45'±, S=0.2000'/'

PDMH #63
RIM: 71.60
IN: 67.55 [15" CPE, PCB #64]
[SEE SHEET C-5.9 FOR DETAILS]

PCB #64 (TYPE 2)
RIM: 71.70
IN: 67.90 [12" CPE, PDI #66]
IN: 69.40 [6" PVC, D.S.]
IN: 68.05 [10" PVC, PAD #65]
IN: 67.90 [12" CPE, PDI #67]
OUT: 67.65 [PDMH #63]
15" CPE, L=9'±, S=0.0111'/'

PAD #65 (DOME GRATE)
RIM: 72.00
IN: 69.50 [6" PVC, D.S.]
IN: 69.50 [6" PVC, D.S.]
OUT: 68.65 [PCB #64]
10" PVC, L=22'±, S=0.0273'/'

PDI #66
RIM: 71.20
IN: 68.50 [8" PVC, R.L.]
OUT: 68.15 [PCB #64]
12" CPE, L=41'±, S=0.0061'/'

PDI #67
RIM: 71.70
IN: 68.20 [12" CPE, PDI #68]
IN: 68.70 [8" PVC, R.L.]
OUT: 68.10 [PCB #64]
12" CPE, L=36'±, S=0.0056'/'

PDI #68
RIM: 71.60
IN: 69.10 [6" PVC, D.S.]
IN: 68.60 [6" PVC, R.L.]
OUT: 68.45 [PDI #67]
12" CPE, L=41'±, S=0.0061'/'

PDI #69
RIM: 60.50
IN: 58.00 [8" PVC, PAD #70]
OUT: 57.85 [PDMH #73]
10" PVC, L=39'±, S=0.0090'/'

PAD #70
RIM: 60.70
IN: 58.30 [8" PVC, PAD #71]
OUT: 58.20 [PDI #69]
8" PVC, L=32'±, S=0.0063'/'

PAD #71
RIM: 60.90
IN: 58.60 [6" PVC, D.S.]
OUT: 58.45 [PAD #70]
8" PVC, L=29'±, S=0.0052'/'

PDMH #72
RIM: 60.20
[SEE SHEET C-5.9 FOR DETAILS]
OUT: 53.90 [PDMH #36]
18" CPE, L=28'±, S=0.0071'/'

PDMH #73
RIM: 60.95
IN: 55.80 [18" CPE, PDMH #75]
IN: 58.50 [6" PVC, WALL U.D.]
IN: 58.00 [8" D.I., PDI #100]
IN: 57.50 [10" PVC, PDI #69]
[SEE SHEET C-5.9 FOR DETAILS]

PAD #98
RIM: 72.05
IN: 68.50 [6" PVC, D.S.]
IN: 69.55 [6" PVC, D.S.]
OUT: 68.35 [PCB #45]
8" PVC, L=42'±, S=0.0155'/'

PDI #100
RIM: 64.40
IN: 62.40 [6" PVC, D.S.]
IN: 61.30 [8" PVC, PAD #101]
OUT: 58.90 [PDMH #73]
8" D.I., L=13'±, S=0.0474'/'

PAD #101 (DOME GRATE)
RIM: 64.50
IN: 61.60 [8" PVC, PAD #102]
OUT: 61.50 [PDI #100]
8" PVC, L=12'±, S=0.0167'/'

PAD #102 (DOME GRATE)
RIM: 64.50
IN: 62.50 [6" PVC, D.S.]
OUT: 62.00 [PAD #101]
8" PVC, L=32'±, S=0.0125'/'

PUSF #103
IN: 53.00 [6" PERF. U.D.]
OUT 49.83 [6" PVC, PDMH #37]

KEY NOTES

1. INSTALL POROUS PAVEMENT (WEST)
2. INSTALL UNDERGROUND SAND FILTER (USF); CONNECT SMG U.D. TO USF
3. INSTALL STORMWATER MANAGEMENT GALLERY (SMG D); STORMTECH MC-3500 SYSTEM, 4 ROWS OF 5 CHAMBERS; INSTALL OBSERVATION WELL PER MFR. SPECIFICATIONS; FILL MATERIAL UNDER THE SMG SHALL BE BE TESTED IN ENSURE A KSAT VALVE <10IN/HR (SEE SHEETS C-5.6 AND C-5.9 FOR DETAILS)
4. CONNECT ROOF LEADER TO 8" PVC DRAIN LINE (SEE ARCH. AND MEP DWG.S)
5. CONNECT ROOF LEADER TO 6" PVC DRAIN LINE (SEE ARCH. AND MEP DWG.S)
6. CONNECT DOWNSPOUT VIA 6" PVC DRAIN TO STORMWATER STRUCTURE OR PIPE W/MANUF'S CONNECTION, TYP. (SEE ARCH. AND MEP DWG.S)
7. INSTALL UNDERDRAIN DETAIL TYPE B
8. INSTALL WALL UNDERDRAIN (SEE L.A. DWG.S FOR DETAILS)
9. CONSTRUCT SEAT WALL, ELEV. 72.8 (SEE L.A. DWG.S FOR DETAILS)
10. INSTALL STORMWATER MANAGEMENT GALLERY (SMG C); STORMTECH MC-3500 SYSTEM, 4 ROWS OF 16 CHAMBERS AND 2 ROW OF 8 CHAMBERS (SEE SHEETS C-5.6 AND C-5.8 FOR DETAILS)

NOTE:

1. SEE LANDSCAPE ARCHITECT PLANS FOR MAINTENANCE STRIP LOCATIONS AT BUILDING AND DETAIL.
2. REFER TO MEP/ARCH DRAWINGS FOR DOWNSPOUTS, ROOF LEADERS AND CONNECTION TO CLOSED DRAINAGE SYSTEM.
3. REFER TO MEP/ARCH DRAWINGS FOR SLAB UNDERDRAINS AND FOOTING DRAINS.

GRAPHIC SCALE

20 0 10 20 40 80

(IN FEET)
1 inch = 20 ft.

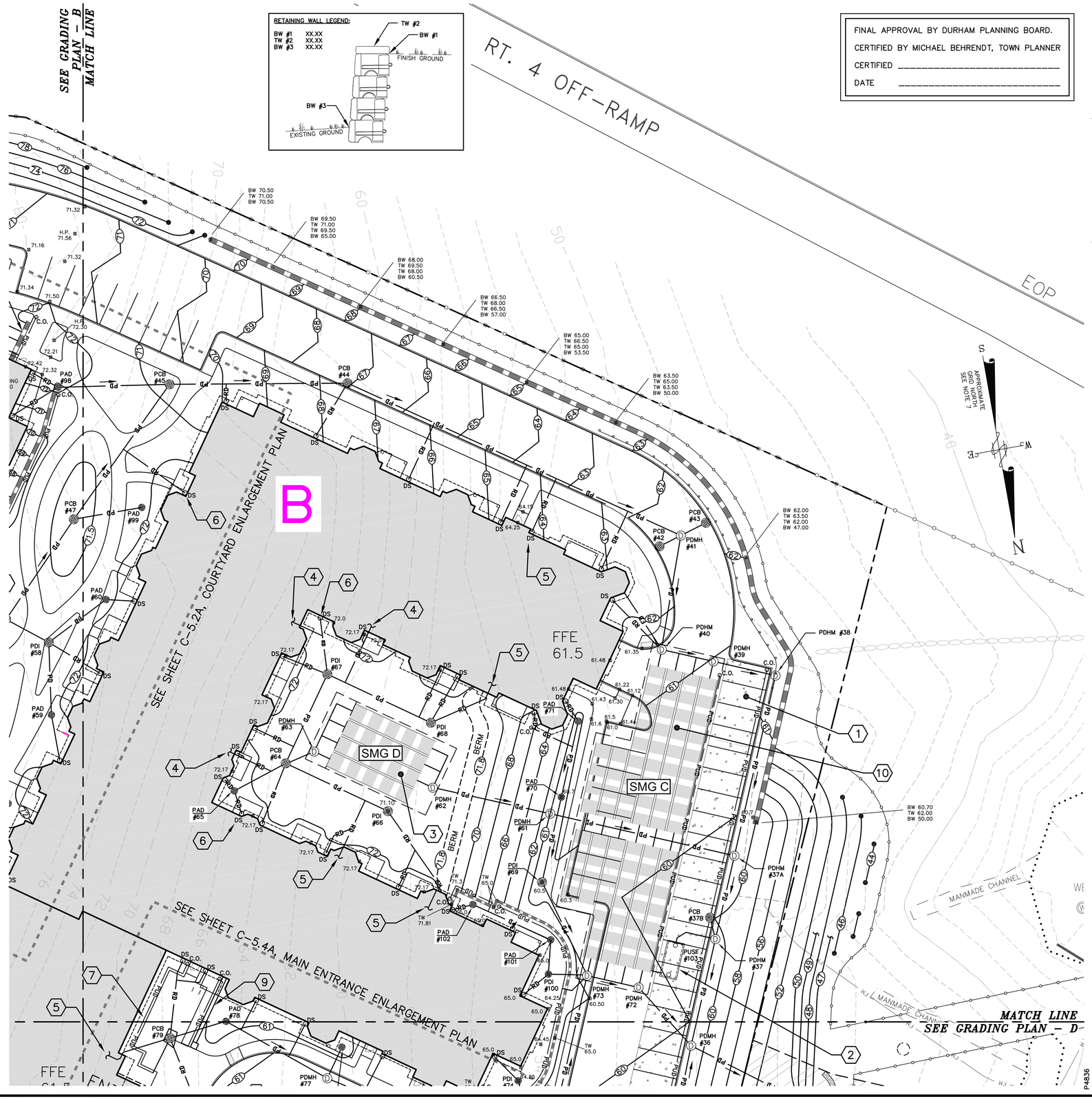

FINAL APPROVAL BY DURHAM PLANNING BOARD.
CERTIFIED BY MICHAEL BEHRENDT, TOWN PLANNER
CERTIFIED _____
DATE _____

ALTUS ENGINEERING, INC.
133 COURT STREET PORTSMOUTH, NH 03801
VOICE: (603) 433-2335
FAX: (603) 433-4194

STATE OF NEW HAMPSHIRE
JEFFREY K. CLIFFORD No. 6524 LICENSED PROFESSIONAL ENGINEER

ISSUED FOR:
FINAL TOWN APPROVAL

ISSUE DATE:
MAY 23, 2018

REVISIONS

NO.	DESCRIPTION	BY	DATE
0	INITIAL SUBMISSION	JKC	7/19/17
1	PB RE-SUBMISSION	JKC	10/16/17
2	PB RE-SUBMISSION	JKC	12/05/17
3	100% D.D.	JKC	12/22/17
4	NHDES AoT SUBMISSION	JKC	1/18/18
5	50% C.D.	JKC	2/16/18
6	PERMIT SET	JKC	3/16/18
7	BID SET	JKC	4/02/18
8	100% C.D.	JKC	4/13/18
9	ADDENDUM 1	JKC	4/24/18
10	FINAL TOWN APPROVAL	JKC	5/23/18

DRAWN BY: RMB
APPROVED BY: JKC
DRAWING FILE: 4836SITE.DWG

SCALE: 1 " = 20'

LAND OWNER – SUBJECT PARCEL:
RIVERWOODS DURHAM
5 WHITE OAK DRIVE
EXETER, NH 03833

APPLICANT:
THE RIVERWOODS GROUP
5 WHITE OAK DRIVE
EXETER, NH 03833

PROJECT:
RIVERWOODS DURHAM
STONE QUARRY DRIVE
DURHAM, NH

TITLE:
GRADING PLAN – C

SHEET NUMBER:
C - 5.3

P4836

PROPOSED DRAINAGE SCHEDULE

PDMH #36 (5' DIA.)
RIM: 60.45
IN: 48.25 [18" CPE, PDMH #37]
IN: 53.70 [18" CPE, PDMH #72]
IN: 47.00 [18" CPE, PCB #80]
OUT: 46.90 [DAYLIGHT]
24" CPE, L=45'±, S=0.0056'/'
OUTFALL W/MFES, ELEV.= 46.65

PDMH #72
RIM: 60.20
[SEE SHEET C-5.9 FOR DETAILS]
OUT: 53.90 [PDMH #36]
18" CPE, L=28'±, S=0.0071'/'

PDMH #73
RIM: 60.95
IN: 55.80 [18" CPE, PDMH #75]
IN: 59.00 [6" PVC, WALL U.D.]
IN: 58.50 [8" D.I., PDI #100]
IN: 56.80 [10" PVC, PDI #69]
[SEE SHEET C-5.9 FOR DETAILS]

PDI #74
RIM: 64.25
IN: 62.00 [6" PVC, D.S.]
OUT: 58.75 [PDMH #75]
8" D.I., L=33'±, S=0.530'/'

PDMH #75
RIM: 59.88
IN: 56.30 [15" CPE, PCB #76]
IN: 56.30 [12" CPE, PDMH #77]
IN: 57.00 [8" D.I., PDI #74
OUT: 56.20 [PDMH #73]
18" CPE, L=76'±, S=0.0053'/'

PCB #76 (TYPE 1)
RIM: 59.45
OUT: 56.40 [PDMH #75]
15" CPE, L=20'±, S=0.0050'/'

PDMH #77
RIM: 60.78
IN: 57.00 [12" CPE, PAD #78]
IN: 57.65 [8" PVC, PAD #92]
OUT: 56.80 [PDMH #75]
12" CPE, L=92'±, S=0.0054'/'

PAD #78 (DOME GRATE)
RIM: 60.50
IN: 57.60 [12" CPE, PCB #79]
OUT: 57.45 [PDMH #77]
12" CPE, L=44'±, S=0.0102'/'

PCB #79 (TYPE 2, PED. GRATE)
RIM: 60.95
IN: 58.90 [6" PVC, U.D.]
IN: 58.40 [6" PVC, D.S.]
IN: 58.90 [6" PVC, U.D.]
IN: 58.40 [6" PVC, R.L.]
IN: 58.40 [6" PVC, D.S.]
OUT: 57.75 [PAD #78]
12" CPE, L=21'±, S=0.0071'/'

PCB #80 (TYPE 2)
RIM: 59.10
IN: 52.20 [18" CPE, PCB #80]
IN: 48.23 [6" CPE, PUSF #104]
OUT: 47.33 [PDMH #36]
18" CPE, L=72'±, S=0.0046'/'

PDMH #81
RIM: 59.40
[SEE SHEET C-5.9 FOR DETAILS]
OUT: 52.40 [PCB #80]
18" CPE, L=17'±, S=0.0118'/'

PDMH #82
RIM: 58.95
IN: 54.30 [18" CPE, PDMH #83]
[SEE SHEET C-5.9 FOR DETAILS]

PDMH #83
RIM: 59.65
IN: 54.60 [12" CPE, PCB #84]
IN: 54.60 [15" CPE, PCB #87]
OUT: 54.50 [PDMH #82]
18" CPE, L=25'±, S=0.0080'/'

PCB #84 (TYPE 2)
RIM: 58.50
IN: 54.85 [12" CPE, PCB #85]
IN: 55.00 [10" PVC, PAD #105]
OUT: 54.75 [PDMH #83]
12" CPE, L=30'±, S=0.0050'/'

PDI #85 (W/4' SUMP)
RIM: 57.25
OUT: 55.10 [PCB #84]
12" CPE, L=50'±, S=0.0050'/'

PCB #86 (TYPE 1)
RIM: 58.25
OUT: 53.75 [DAYLIGHT]
12" CPE, L=72'±, S=0.0104'/'
OUTFALL W/MFES, ELEV.=53.00

PCB #87 (TYPE 1)
RIM: 59.45
IN: 55.95 [12" CPE, PDMH #88]
OUT: 55.70 [PDMH #83]
15" CPE, L=58'±, S=0.0190'/'

PDMH #88
RIM: 60.07
IN: 57.20 [6" PVC, D.S.]
IN: 56.40 [12" CPE, PAD #89]
OUT: 56.30 [PCB #87]
12" CPE, L=43'±, S=0.0081'/'

PAD #89
RIM: 60.50 (DOME GRATE)
IN: 57.35 [10" PVC, PDI #90]
OUT: 57.25 [PDMH #88]
12" CPE, L=106'±, S=0.0080'/'

PDI #90 (PEDESTRIAN GRATE)
RIM: 60.95
IN: 58.45 [8" PVC, R.L.]
IN: 58.95 [6" PVC, U.D.]
IN: 58.45 [6" PVC, D.S.]
OUT: 57.50 [PAD #89]
10" PVC, L=24'±, S=0.0063'/'

PAD #92 (DOME GRATE)
RIM: 60.65
OUT: 57.75 [PDMH #77]
8" PVC, L=11'±, S=0.0091'/'

PAD #93 (DOME GRATE)
RIM: 60.65
IN: 57.90 [6" PVC, D.S.]
OUT: 57.75 [WYE CONNECTION]
8" PVC, L=9'±, S=0.0050'/'

PUSF #104
IN: 51.50 [6" PERF. U.D.]
OUT 48.33 [6" CPE, PCB #80]

PAD #105
RIM: 64.00
IN: 61.00 [10" PVC, PAD #106]
IN: 61.50 [6" PVC, D.S.]
IN: 60.00 [6" PVC, WALL U.D.]
OUT: 59.50 [PCB #84]
10" PVC, L=68'±, S=0.0662'/'

PAD #106 (SOLID COVER)
RIM: 71.50
IN: 68.40 [10" PVC, PAD #95]
IN: 67.25 [6" PVC, WALL U.D.]
OUT: 64.50 [PAD #105]
10" PVC, L=23'±, S=0.1522'/'

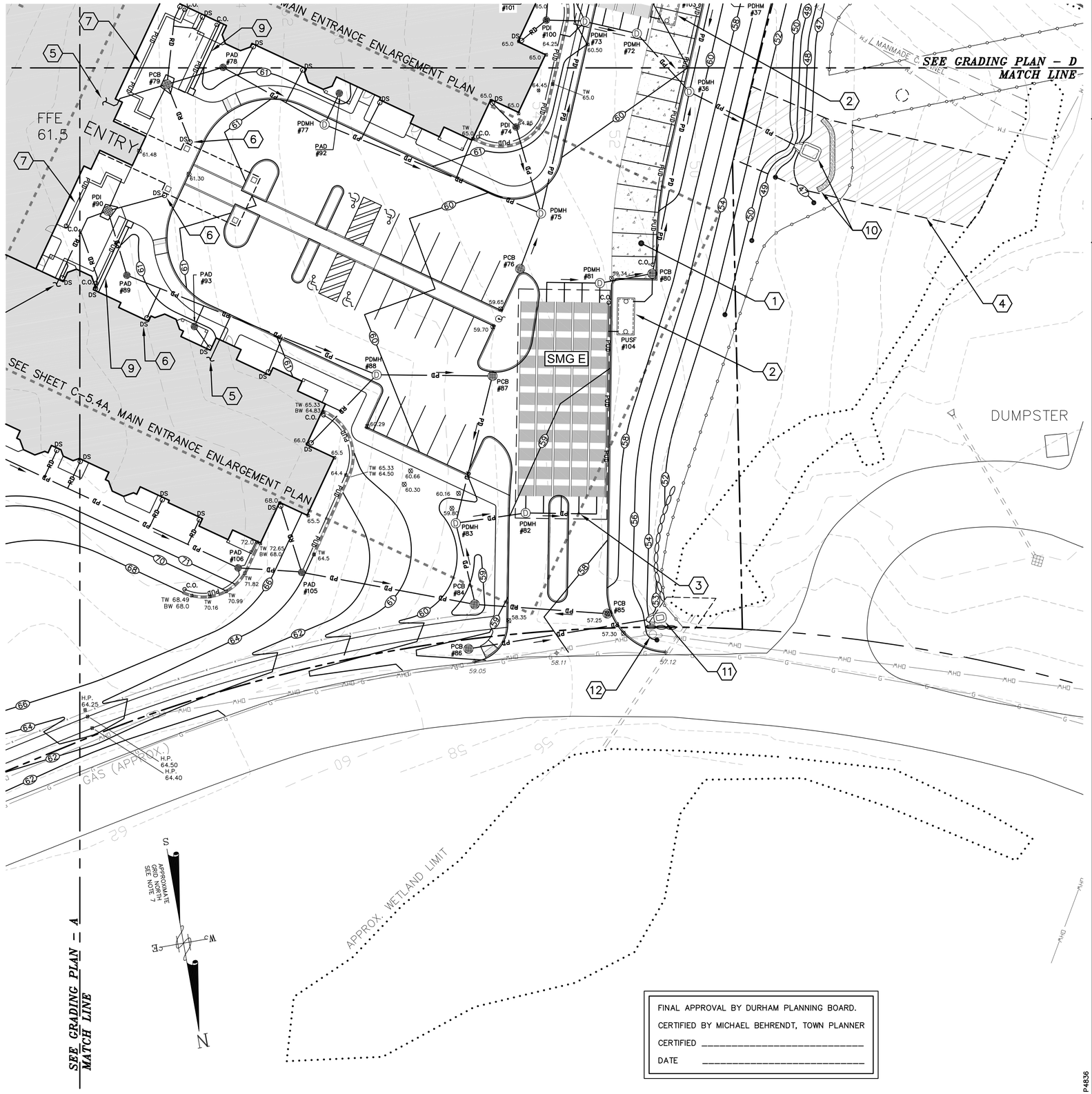

KEY NOTES

1. INSTALL POROUS PAVEMENT (WEST)
2. INSTALL UNDERGROUND SAND FILTER (USF); CONNECT SMG U.D. TO USF
3. INSTALL STORMWATER MANAGEMENT GALLERY (SMG E); STORMTECH MC-3500 SYSTEM, 5 ROWS OF 11 CHAMBERS (SEE SHEETS C-5.6 AND C-5.9 FOR DETAILS)
4. PROPOSED 30-FOOT WIDE DRAINAGE EASEMENT
5. CONNECT ROOF LEADER TO 6" PVC DRAIN LINE (SEE ARCH. AND MEP DWG.S)
6. CONNECT DOWNSPOUT VIA 6" PVC DRAIN TO STORMWATER STRUCTURE OR PIPE W/MANUF'S CONNECTION, TYP. (SEE ARCH. AND MEP DWG.S)
7. INSTALL UNDERDRAIN DETAIL TYPE B
8. INSTALL WALL UNDERDRAIN (SEE L.A. DWG.S FOR DETAILS)
9. CONSTRUCT SEAT WALL W/UNDERDRAIN, ELEV. 72.8 (SEE L.A. DWG.S FOR DETAILS)
10. INSTALL PLUNGE POOL AT OUTFALL W/35' STONE LIP LEVEL SPREADER, ELEV.=46.65
11. INSTALL PLUNGE POOL AT OUTFALL
12. UTILITY POLE SHALL BE SUPPORTED DURING DRAINAGE INSTALLATION, AS NECESSARY

NOTE:

1. SEE LANDSCAPE ARCHITECT PLANS FOR MAINTENANCE STRIP LOCATIONS AT BUILDING AND DETAIL.
2. REFER TO MEP/ARCH DRAWINGS FOR DOWNSPOUTS, ROOF LEADERS AND CONNECTION TO CLOSED DRAINAGE SYSTEM.
3. REFER TO MEP/ARCH DRAWINGS FOR SLAB UNDERDRAINS AND FOOTING DRAINS.

GRAPHIC SCALE

20 0 10 20 40 80

(IN FEET)
1 inch = 20 ft.

FINAL APPROVAL BY DURHAM PLANNING BOARD.
CERTIFIED BY MICHAEL BEHRENDT, TOWN PLANNER
CERTIFIED _____
DATE _____

P4836

ALTUS ENGINEERING, INC.
133 COURT STREET PORTSMOUTH, NH 03801
VOICE: (603) 433-2335
FAX: (603) 433-4194

STATE OF NEW HAMPSHIRE
JEFFREY K. CLIFFORD
No. 6524
LICENSED PROFESSIONAL ENGINEER

ISSUED FOR:
FINAL TOWN APPROVAL

ISSUE DATE:
MAY 23, 2018

REVISIONS

NO.	DESCRIPTION	BY	DATE
0	INITIAL SUBMISSION	JKC	7/19/17
1	PB RE-SUBMISSION	JKC	10/16/17
2	PB RE-SUBMISSION	JKC	12/05/17
3	100% D.D.	JKC	12/22/17
4	NHDES AoT SUBMISSION	JKC	1/18/18
5	50% C.D.	JKC	2/16/18
6	PERMIT SET	JKC	3/16/18
7	BID SET	JKC	4/02/18
8	100% C.D.	JKC	4/13/18
9	ADDENDUM 1	JKC	4/24/18
10	FINAL TOWN APPROVAL	JKC	5/23/18

DRAWN BY: RMB
APPROVED BY: JKC
DRAWING FILE: 4836SITE.DWG

SCALE: 1 " = 20'

LAND OWNER – SUBJECT PARCEL:
RIVERWOODS DURHAM
5 WHITE OAK DRIVE
EXETER, NH 03833

APPLICANT:
THE RIVERWOODS GROUP
5 WHITE OAK DRIVE
EXETER, NH 03833

PROJECT:
RIVERWOODS DURHAM
STONE QUARRY DRIVE
DURHAM, NH

TITLE:
GRADING PLAN – D

SHEET NUMBER:
C - 5.4

FINAL APPROVAL BY DURHAM PLANNING BOARD.

CERTIFIED BY MICHAEL BEHRENDT, TOWN PLANNER

CERTIFIED _____

DATE _____

APPROXIMATE GRID NORTH SEE NOTE 7

GRAPHIC SCALE

10 0 5 10 20 40

(IN FEET)
1 inch = 10 ft.

ALTUS ENGINEERING, INC.

133 COURT STREET PORTSMOUTH, NH 03801
VOICE: (603) 433-2335
FAX: (603) 433-4194

STATE OF NEW HAMPSHIRE
JEFFREY K. CLIFFORD No. 6524 LICENSED PROFESSIONAL ENGINEER

ISSUED FOR:
FINAL TOWN APPROVAL

ISSUE DATE:
MAY 23, 2018

REVISIONS

NO.	DESCRIPTION	BY	DATE
0	PERMIT SET	JKC	3/16/18
1	BID SET	JKC	4/02/18
2	100% C.D.	JKC	4/13/18
3	ADDENDUM 1	JKC	4/24/18
4	FINAL TOWN APPROVAL	JKC	5/23/18

DRAWN BY: RMB
APPROVED BY: JKC
DRAWING FILE: 4836SITE.DWG

SCALE:
1 " = 10'

LAND OWNER – SUBJECT PARCEL:

RIVERWOODS DURHAM
5 WHITE OAK DRIVE
EXETER, NH 03833

APPLICANT:

THE RIVERWOODS GROUP
5 WHITE OAK DRIVE
EXETER, NH 03833

PROJECT:

RIVERWOODS DURHAM
STONE QUARRY DRIVE
DURHAM, NH

TITLE:

MAIN ENTRANCE ENLARGEMENT PLAN

SHEET NUMBER:

C - 5.4A

P4836

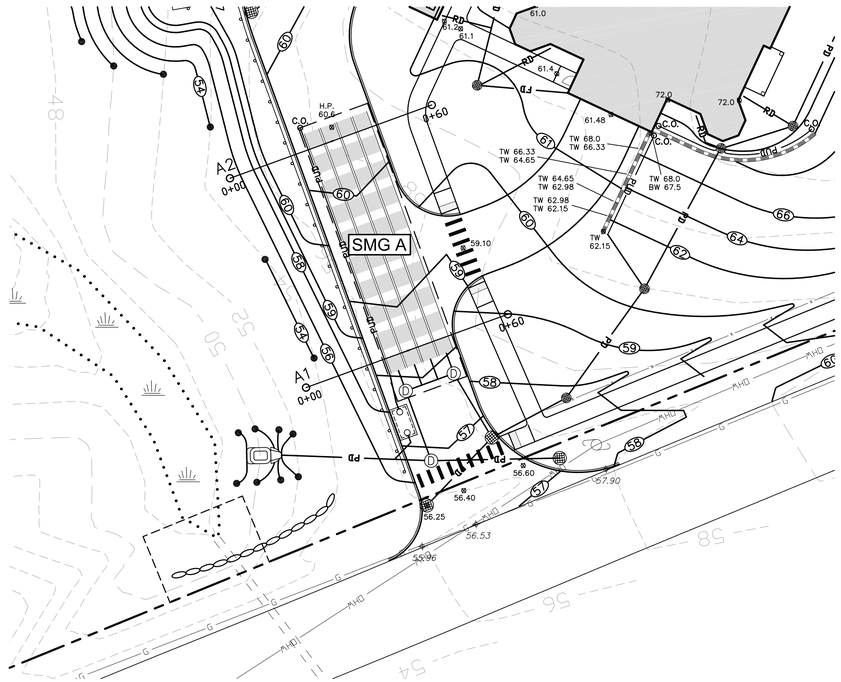

GRAPHIC SCALE

20 0 10 20 40 80

(IN FEET)
1 inch = 20 ft.

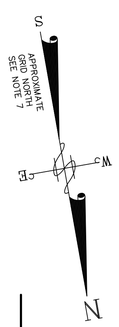

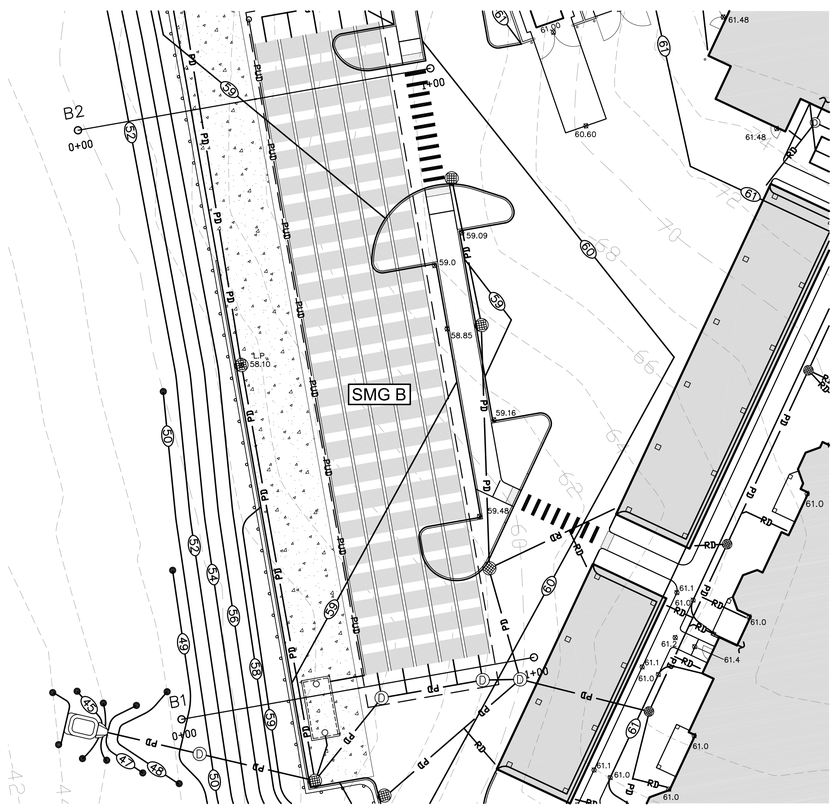

GRAPHIC SCALE

20 0 10 20 40 80

(IN FEET)
1 inch = 20 ft.

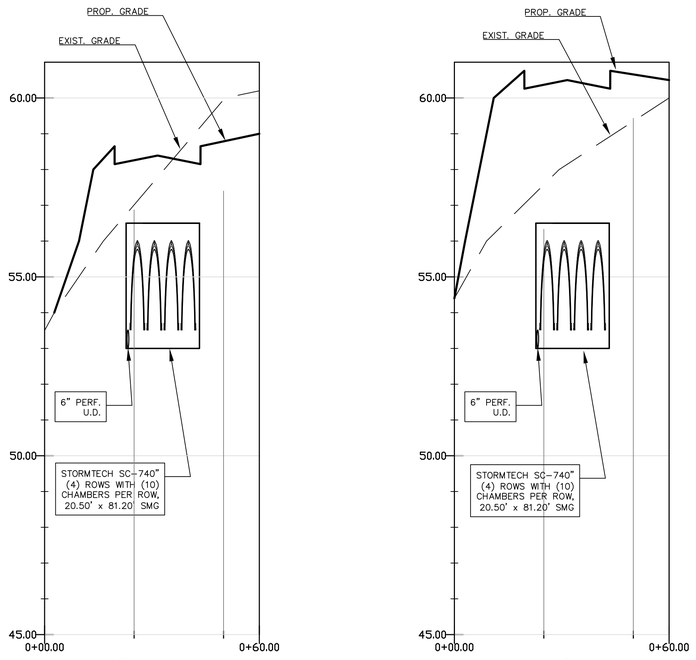

STORMWATER MANAGEMENT GALLERY "A"

HORIZONTAL SCALE: 1" = 20'
VERTICAL SCALE: 1" = 2'

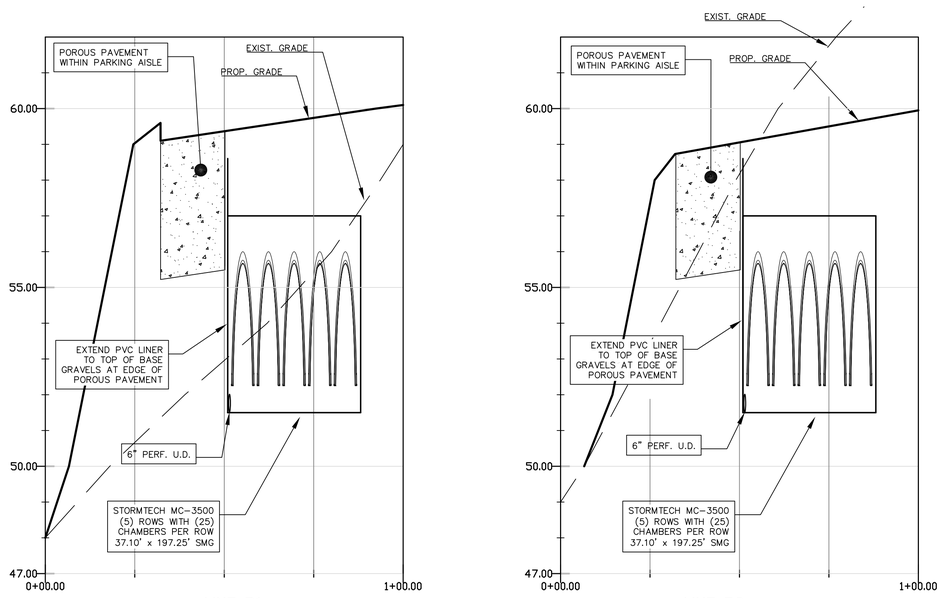

STORMWATER MANAGEMENT GALLERY "B"

HORIZONTAL SCALE: 1" = 20'
VERTICAL SCALE: 1" = 2'

ALTUS ENGINEERING, INC.
133 COURT STREET PORTSMOUTH, NH 03801
VOICE: (603) 433-2335
FAX: (603) 433-4194

STATE OF NEW HAMPSHIRE
JEFFREY K. CLIFFORD
No. 6524
LICENSED PROFESSIONAL ENGINEER

ISSUED FOR:
FINAL TOWN APPROVAL

ISSUE DATE:
MAY 23, 2018

REVISIONS

NO.	DESCRIPTION	BY	DATE
0	PB SUBMISSION	JKC	12/05/17
1	100% D.D.	JKC	12/22/17
2	NHDES AoT SUBMISSION	JKC	1/18/18
3	50% C.D.	JKC	2/16/18
4	PERMIT SET	JKC	3/16/18
5	BID SET	JKC	4/02/18
6	100% C.D.	JKC	4/13/18
7	ADDENDUM 1	JKC	4/24/18
8	FINAL TOWN APPROVAL	JKC	5/23/18

DRAWN BY: RMB
APPROVED BY: JKC
DRAWING FILE: 4836SITE.DWG

SCALE: 1 " = 20'

LAND OWNER – SUBJECT PARCEL:
RIVERWOODS DURHAM
5 WHITE OAK DRIVE
EXETER, NH 03833

APPLICANT:
THE RIVERWOODS GROUP
5 WHITE OAK DRIVE
EXETER, NH 03833

PROJECT:
RIVERWOODS DURHAM
STONE QUARRY DRIVE
DURHAM, NH

TITLE:
STORMWATER MANAGEMENT GALLERY – CROSS SECTIONS

SHEET NUMBER:
C - 5.5

P4836

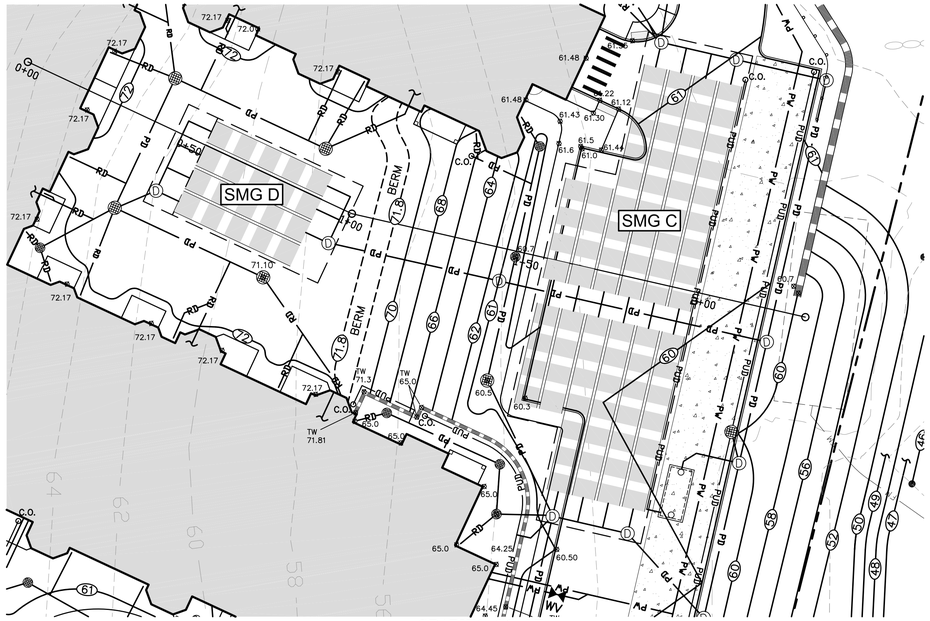

GRAPHIC SCALE

20 0 10 20 40 80

(IN FEET)
1 inch = 20 ft.

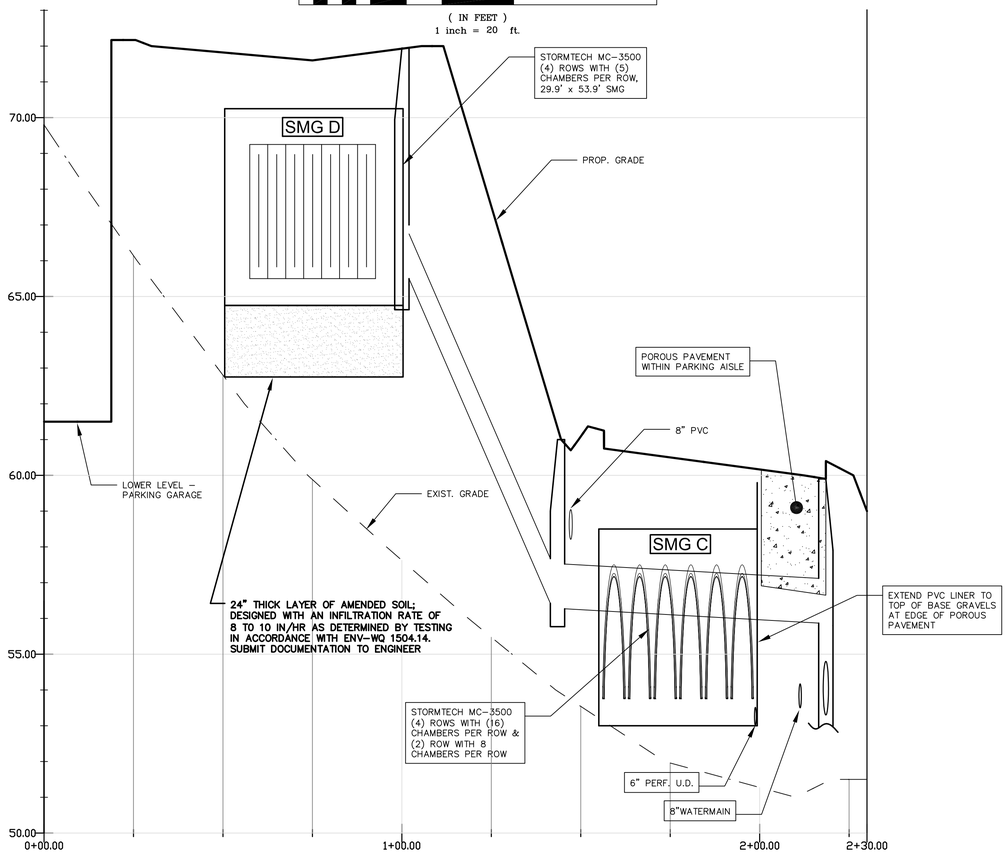

STORMWATER MANAGEMENT GALLERY "C " & "D"

HORIZONTAL SCALE: 1" = 20'
VERTICAL SCALE: 1" = 2'

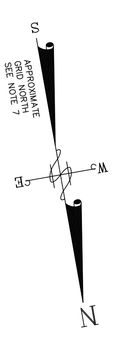

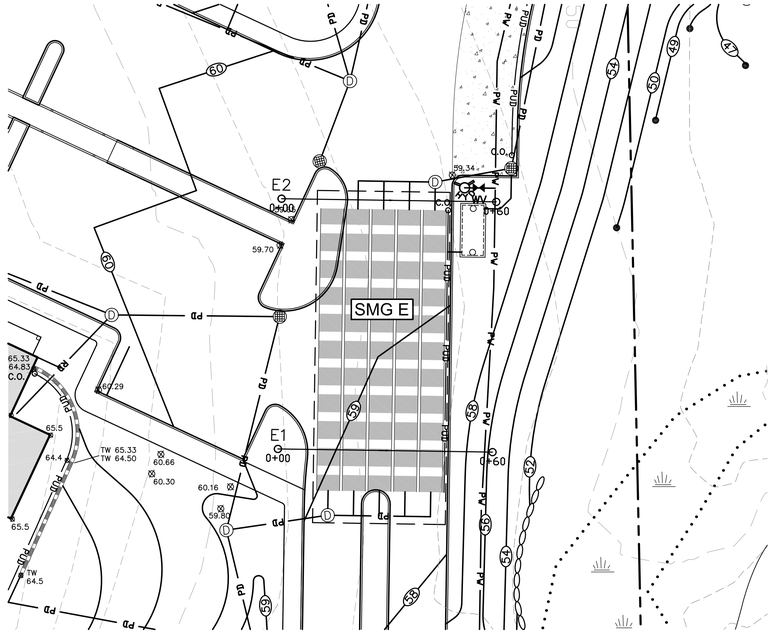

GRAPHIC SCALE

20 0 10 20 40 80

(IN FEET)
1 inch = 20 ft.

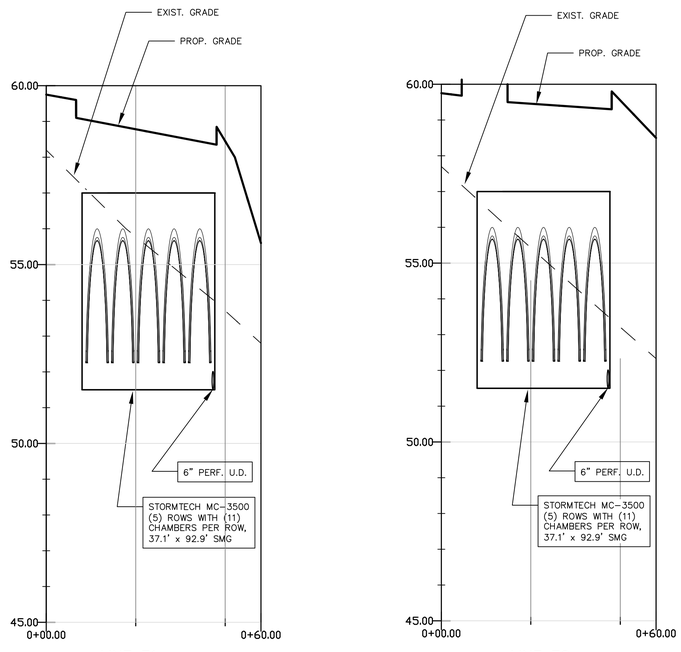

STORMWATER MANAGEMENT GALLERY "E"

HORIZONTAL SCALE: 1" = 20'
VERTICAL SCALE: 1" = 2'

P4836

ALTUS ENGINEERING, INC.
133 COURT STREET PORTSMOUTH, NH 03801
VOICE: (603) 433-2335
FAX: (603) 433-4194

JEFFREY K. CLIFFORD No. 6524 LICENSED PROFESSIONAL ENGINEER STATE OF NEW HAMPSHIRE

ISSUED FOR:
FINAL TOWN APPROVAL

ISSUE DATE:
MAY 23, 2018

REVISIONS

NO.	DESCRIPTION	BY	DATE
0	PB SUBMISSION	JKC	12/05/17
1	100% D.D.	JKC	12/22/17
2	NHDES AoT SUBMISSION	JKC	1/18/18
3	50% C.D.	JKC	2/16/18
4	PERMIT SET	JKC	3/16/18
5	BID SET	JKC	4/02/18
6	100% C.D.	JKC	4/13/18
7	ADDENDUM 1	JKC	4/24/18
8	FINAL TOWN APPROVAL	JKC	5/23/18

DRAWN BY: RMB
APPROVED BY: JKC
DRAWING FILE: 4836SITE.DWG

SCALE: 1 " = 20'

LAND OWNER – SUBJECT PARCEL:
RIVERWOODS DURHAM
5 WHITE OAK DRIVE
EXETER, NH 03833

APPLICANT:
THE RIVERWOODS GROUP
5 WHITE OAK DRIVE
EXETER, NH 03833

PROJECT:
RIVERWOODS DURHAM
STONE QUARRY DRIVE
DURHAM, NH

TITLE:
STORMWATER MANAGEMENT GALLERY – CROSS SECTIONS

SHEET NUMBER:
C - 5.6

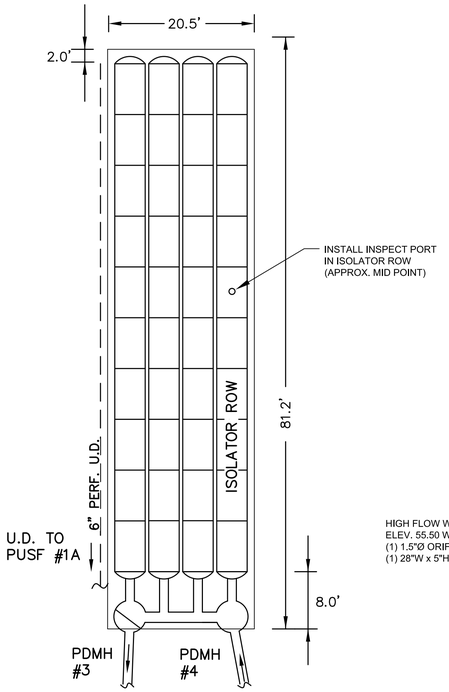

STORMWATER MANAGEMENT GALLERY 'A' LAYOUT
4 ROWS OF 10 SEGMENTS

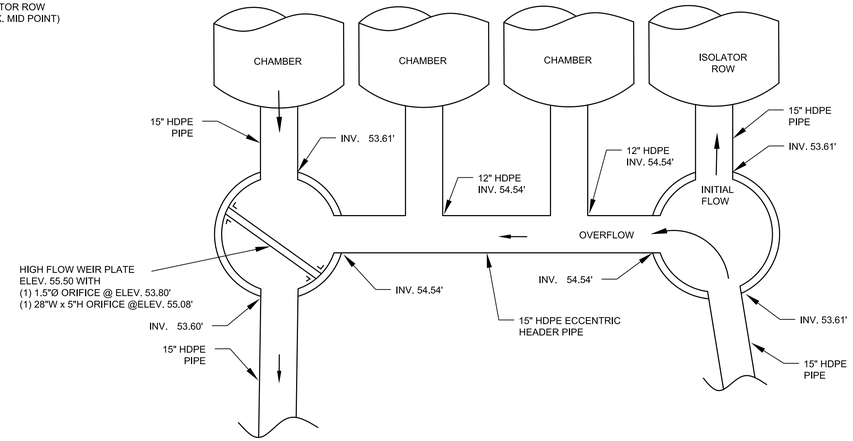

PDMH #3
OUTLET CONTROL STRUCTURE DETAIL

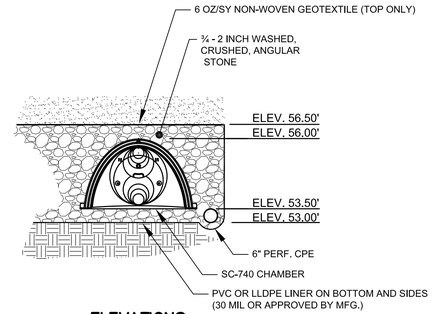

PDMH #4
INLET CONTROL STRUCTURE DETAIL

ELEVATIONS

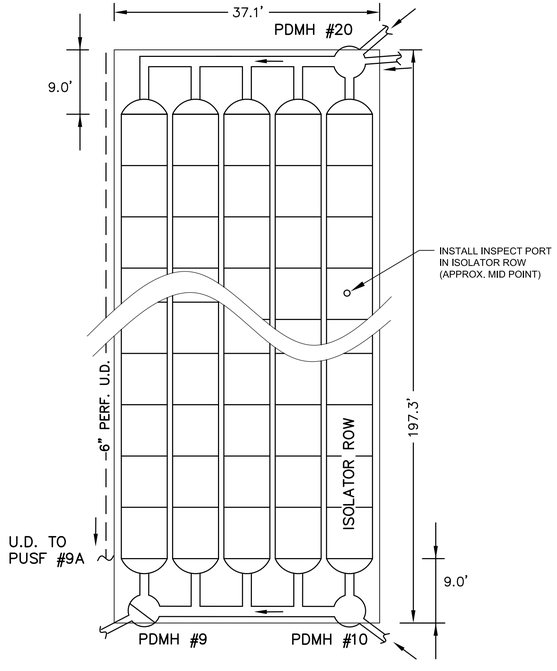

STORMWATER MANAGEMENT GALLERY 'B' LAYOUT
5 ROWS OF 25 SEGMENTS

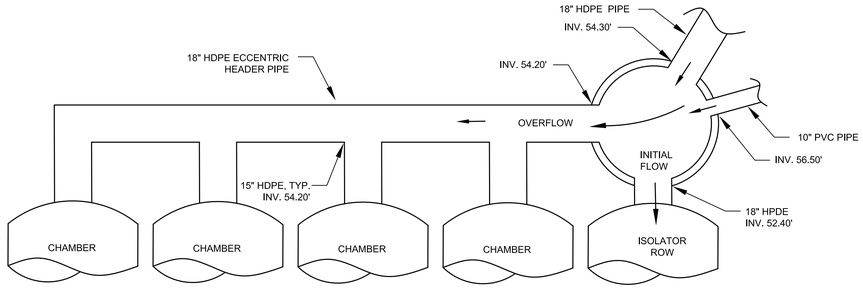

PDMH #20
INLET CONTROL STRUCTURE DETAIL

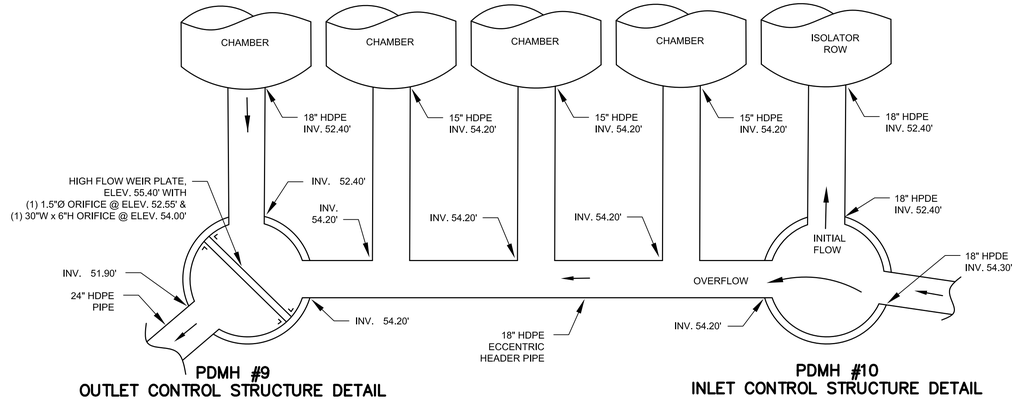

PDMH #9
OUTLET CONTROL STRUCTURE DETAIL

PDMH #10
INLET CONTROL STRUCTURE DETAIL

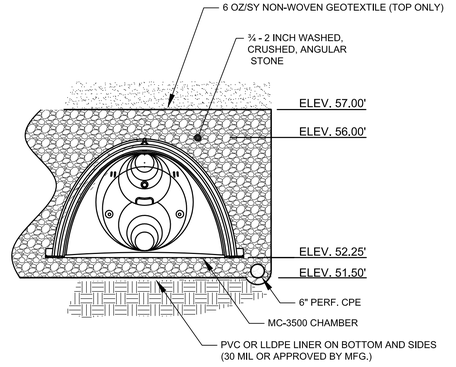

ELEVATIONS

FINAL APPROVAL BY DURHAM PLANNING BOARD.
CERTIFIED BY MICHAEL BEHRENDT, TOWN PLANNER
CERTIFIED _____
DATE _____

ALTUS ENGINEERING, INC.
133 COURT STREET PORTSMOUTH, NH 03801
VOICE: (603) 433-2335
FAX: (603) 433-4194

STATE OF NEW HAMPSHIRE
JEFFREY K. CLIFFORD No. 6524 LICENSED PROFESSIONAL ENGINEER

ISSUED FOR:
FINAL TOWN APPROVAL

ISSUE DATE:
MAY 23, 2018

REVISIONS

NO.	DESCRIPTION	BY	DATE
0	PB SUBMISSION	JKC	12/05/17
1	100% D.D.	JKC	12/22/17
2	NHDES AoT SUBMISSION	JKC	1/18/18
3	50% C.D.	JKC	2/16/18
4	PERMIT SET	JKC	3/16/18
5	BID SET	JKC	4/02/18
6	100% C.D.	JKC	4/13/18
7	FINAL TOWN APPROVAL	JKC	5/23/18

DRAWN BY: RMB
APPROVED BY: JKC
DRAWING FILE: 4836DS.DWG

SCALE: N.T.S.

LAND OWNER – SUBJECT PARCEL:
RIVERWOODS DURHAM
5 WHITE OAK DRIVE
EXETER, NH 03833

APPLICANT:
THE RIVERWOODS GROUP
5 WHITE OAK DRIVE
EXETER, NH 03833

PROJECT:
RIVERWOODS DURHAM
STONE QUARRY DRIVE
DURHAM, NH

TITLE:
STORMWATER MANAGEMENT GALLERY – LAYOUT

SHEET NUMBER:
C - 5.7

P4836

FINAL APPROVAL BY DURHAM PLANNING BOARD.

CERTIFIED BY MICHAEL BEHRENDT, TOWN PLANNER

CERTIFIED _____

DATE _____

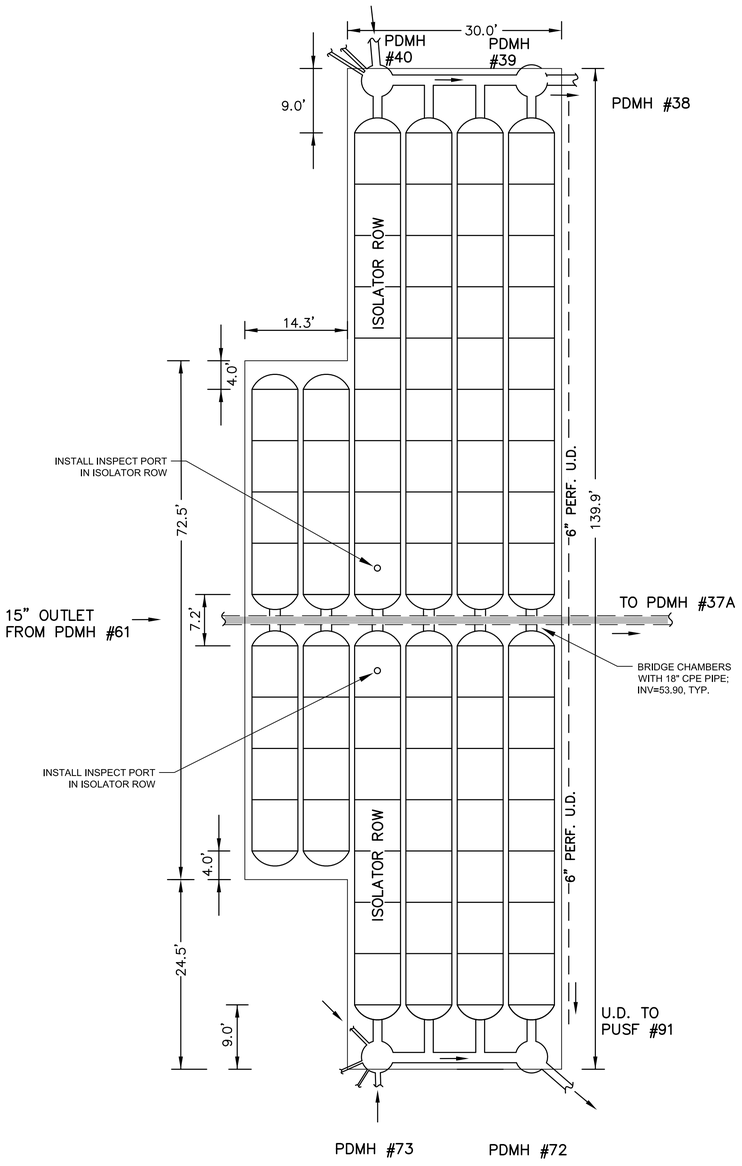

STORMWATER MANAGEMENT GALLERY 'C' LAYOUT
4 ROWS OF 16 SEGMENTS &
2 ROWS OF 8 SEGMENT

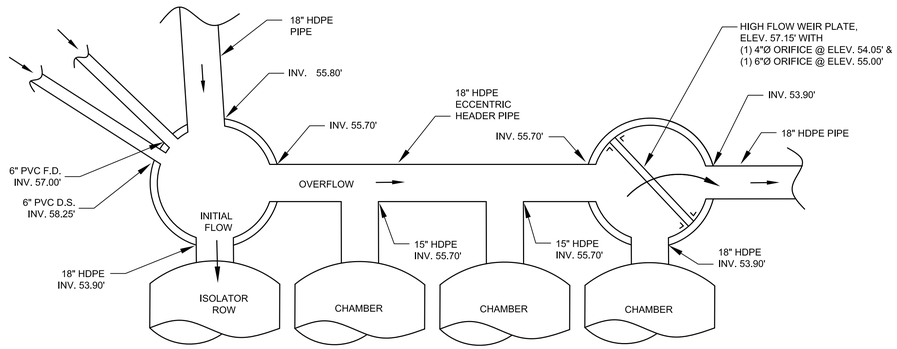

PDMH #40
INLET CONTROL STRUCTURE DETAIL

PDMH #39
OUTLET CONTROL STRUCTURE DETAIL

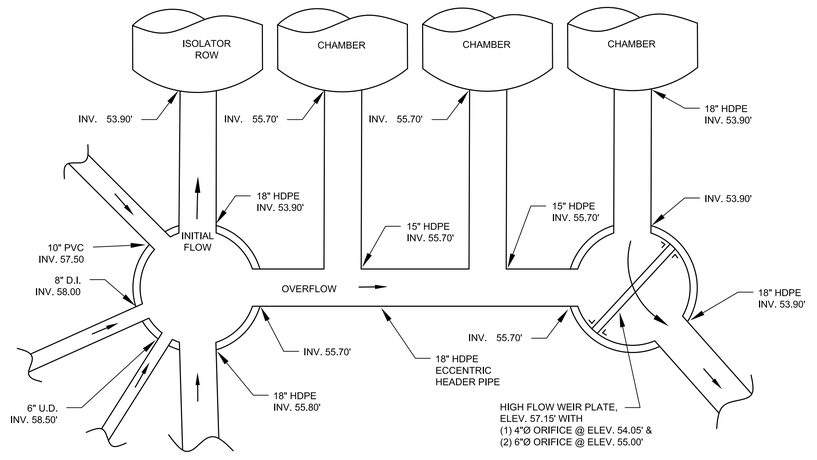

PDMH #73
INLET CONTROL STRUCTURE DETAIL

PDMH #72
OUTLET CONTROL STRUCTURE DETAIL

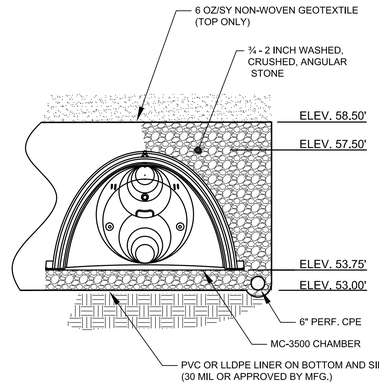

ELEVATIONS

ALTUS ENGINEERING, INC.

133 COURT STREET PORTSMOUTH, NH 03801
VOICE: (603) 433-2335
FAX: (603) 433-4194

STATE OF NEW HAMPSHIRE
JEFFREY K. CLIFFORD
No. 6524
LICENSED PROFESSIONAL ENGINEER

ISSUED FOR:
FINAL TOWN APPROVAL

ISSUE DATE:
MAY 23, 2018

REVISIONS

NO.	DESCRIPTION	BY	DATE
0	PB SUBMISSION	JKC	12/05/17
1	100% D.D.	JKC	12/22/17
2	NHDES AoT SUBMISSION	JKC	1/18/18
3	50% C.D.	JKC	2/16/18
4	PERMIT SET	JKC	3/16/18
5	BID SET	JKC	4/02/18
6	100% C.D.	JKC	4/13/18
7	ADDENDUM 1	JKC	4/24/18
8	FINAL TOWN APPROVAL	JKC	5/23/18

DRAWN BY: RMB
APPROVED BY: JKC
DRAWING FILE: 4836DS.DWG

SCALE: N.T.S.

LAND OWNER – SUBJECT PARCEL:

RIVERWOODS DURHAM
5 WHITE OAK DRIVE
EXETER, NH 03833

APPLICANT:

THE RIVERWOODS GROUP
5 WHITE OAK DRIVE
EXETER, NH 03833

PROJECT:

RIVERWOODS DURHAM
STONE QUARRY DRIVE
DURHAM, NH

TITLE:

STORMWATER MANAGEMENT GALLERY – LAYOUT

SHEET NUMBER:

C - 5.8

P4836

FINAL APPROVAL BY DURHAM PLANNING BOARD.

CERTIFIED BY MICHAEL BEHRENDT, TOWN PLANNER

CERTIFIED _____

DATE _____

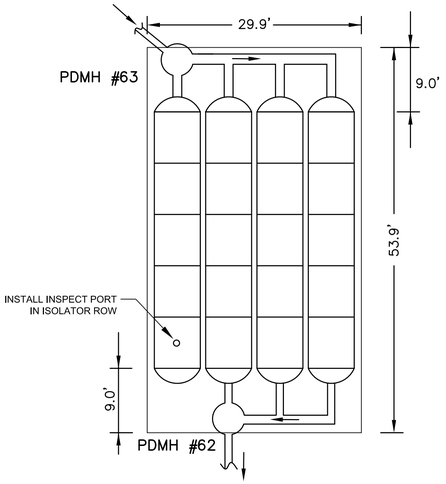

STORMWATER MANAGEMENT GALLERY 'D' LAYOUT
4 ROWS OF 5 SEGMENTS

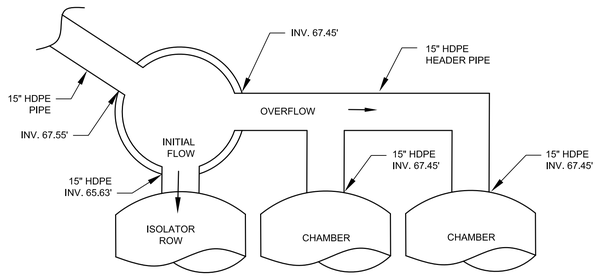

PDMH #63
INLET CONTROL STRUCTURE DETAIL

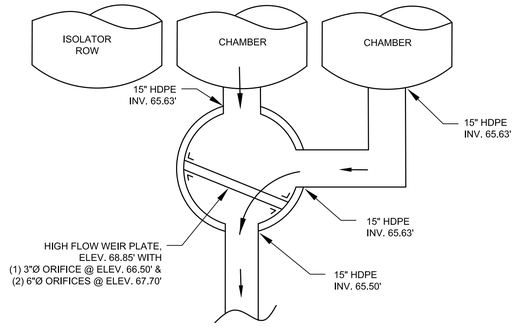

PDMH #62
OUTLET CONTROL STRUCTURE DETAIL

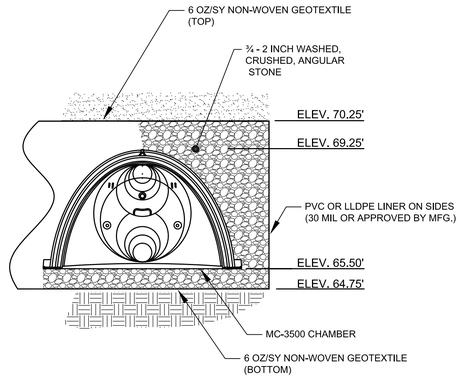

ELEVATIONS

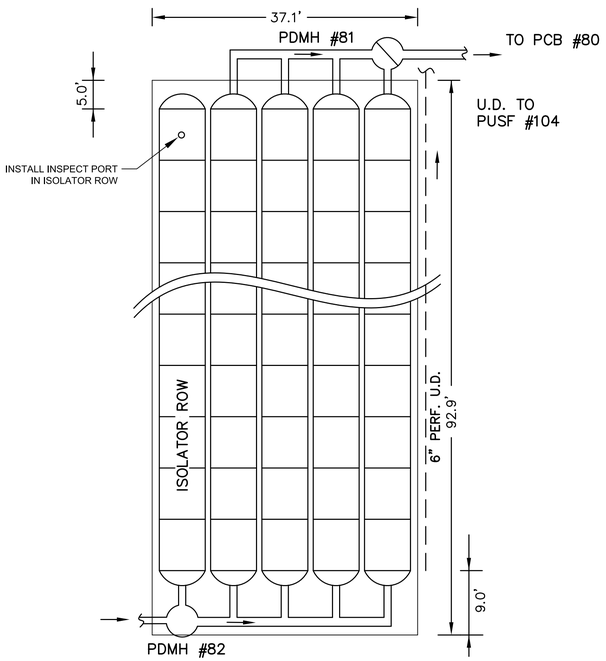

STORMWATER MANAGEMENT GALLERY 'E' LAYOUT
5 ROWS OF 11 SEGMENTS

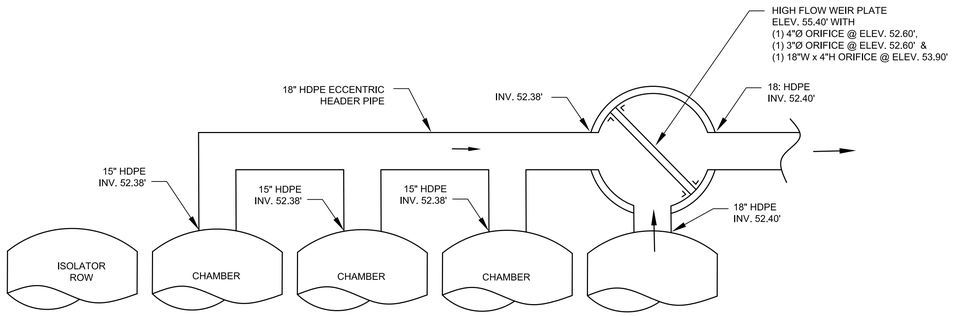

PDMH #80A
OUTLET CONTROL STRUCTURE DETAIL

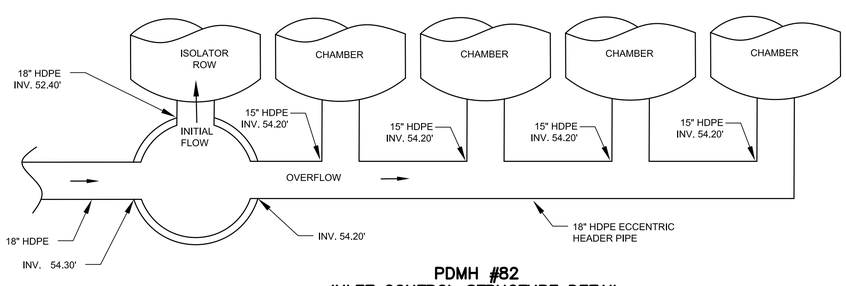

PDMH #82
INLET CONTROL STRUCTURE DETAIL

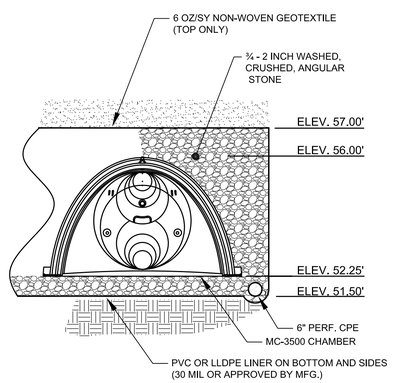

ELEVATIONS

ALTUS ENGINEERING, INC.

133 COURT STREET PORTSMOUTH, NH 03801
VOICE: (603) 433-2335
FAX: (603) 433-4194

STATE OF NEW HAMPSHIRE
JEFFREY K. CLIFFORD No. 6524 LICENSED PROFESSIONAL ENGINEER

ISSUED FOR:
FINAL TOWN APPROVAL

ISSUE DATE:
MAY 23, 2018

REVISIONS

NO.	DESCRIPTION	BY	DATE
0	PB SUBMISSION	JKC	12/05/17
1	100% D.D.	JKC	12/22/17
2	NHDES AoT SUBMISSION	JKC	1/18/18
3	50% C.D.	JKC	2/16/18
4	PERMIT SET	JKC	3/16/18
5	BID SET	JKC	4/02/18
6	100% C.D.	JKC	4/13/18
7	FINAL TOWN APPROVAL	JKC	5/23/18

DRAWN BY: RMB
APPROVED BY: JKC
DRAWING FILE: 4836DS.DWG

SCALE: N.T.S.

LAND OWNER – SUBJECT PARCEL:
RIVERWOODS DURHAM
5 WHITE OAK DRIVE
EXETER, NH 03833

APPLICANT:
THE RIVERWOODS GROUP
5 WHITE OAK DRIVE
EXETER, NH 03833

PROJECT:
RIVERWOODS DURHAM
STONE QUARRY DRIVE
DURHAM, NH

TITLE:
STORMWATER MANAGEMENT GALLERY – LAYOUT

SHEET NUMBER:
C - 5.9

P4836

FINAL APPROVAL BY DURHAM PLANNING BOARD.
CERTIFIED BY MICHAEL BEHRENDT, TOWN PLANNER
CERTIFIED _____
DATE _____

ALTUS ENGINEERING, INC.
133 COURT STREET PORTSMOUTH, NH 03801
VOICE: (603) 433-2335
FAX: (603) 433-4194

JEFFREY K. CLIFFORD No. 6524 LICENSED PROFESSIONAL ENGINEER STATE OF NEW HAMPSHIRE

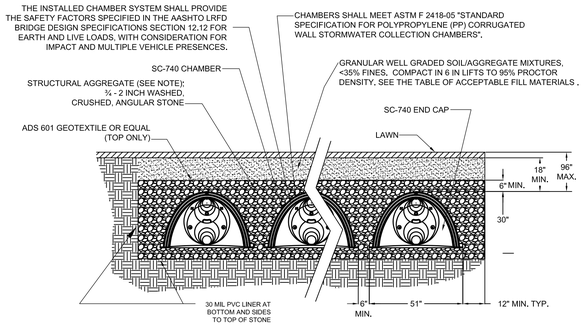

THIS CROSS SECTION DETAILS THE REQUIREMENTS NECESSARY TO SATISFY THE SAFETY FACTORS SPECIFIED IN THE AASHTO LRFD BRIDGE DESIGN SPECIFICATIONS SECTION 12.12 FOR EARTH AND LIVE LOADS USING STORMTECH CHAMBERS

STRUCTURAL AGGREGATE NOTE:
SAMPLES SHALL BE TESTED IN ACCORDANCE TO ASTM C29 TO DETERMINE THE BULK DENSITY AND VERIFY THE POROSITY OF THE AGGREGATE. THE ENGINEER SHALL BE NOTIFIED IF THE POROSITY IS LESS THAN 40%.

STORMTECH SC-740 TYPICAL CROSS SECTION

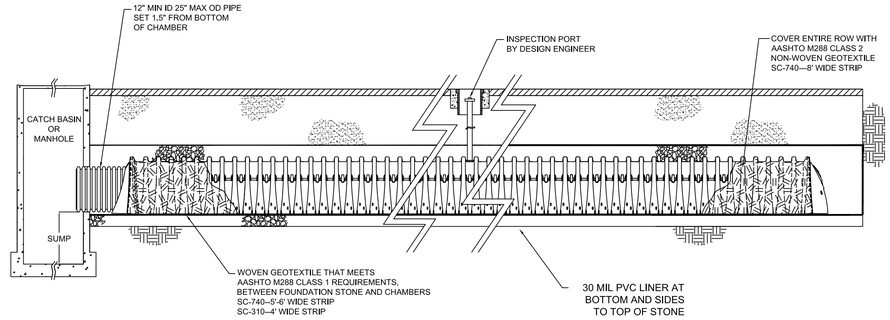

STORMTECH ISOLATOR ROW PROFILE

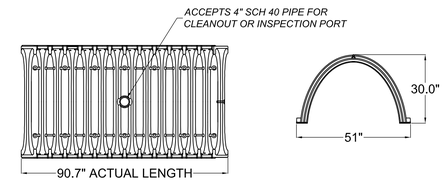

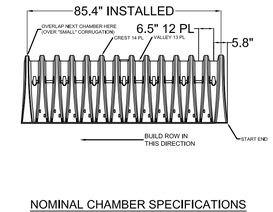

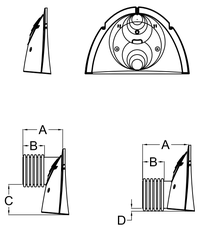

NOMINAL CHAMBER SPECIFICATIONS
SIZE (W x H x INSTALLED LENGTH) - *51.0" x 30.0" x 85.4"*
CHAMBER STORAGE - *45.9 CUBIC FEET*
MINIMUM INSTALLED STORAGE - *74.9 CUBIC FEET*
WEIGHT - *75 LBS.*

STUBS AT TOP OF END CAP FOR PARTS NUMBERS ENDING WITH "T"

STUBS AT BOTTOM OF END CAP FOR PARTS NUMBERS ENDING WITH "B"

PART #	CHAMBER	PIPE SIZE	A	B	C	D
SC740EPE06T	SC 740	6 in (150 mm)	10.90 in (277 mm)	3.85 in (98 mm)	18.50 in (470 mm)	N/A
SC740EPE06B	SC 740	6 in (150 mm)	10.90 in (277 mm)	3.85 in (98 mm)	N/A	0.50 in (13 mm)
SC740EPE12T	SC 740	12 in (300 mm)	14.70 in (373 mm)	7.70 in (196 mm)	12.50 in (318 mm)	N/A
SC740EPE12B	SC 740	12 in (300 mm)	14.70 in (373 mm)	7.70 in (196 mm)	N/A	1.20 in (30 mm)
SC740EPE15T	SC 740	15 in (375 mm)	18.40 in (467 mm)	10.36 in (263 mm)	9.00 in (229 mm)	N/A
SC740EPE15B	SC 740	15 in (375 mm)	18.40 in (467 mm)	10.36 in (263 mm)	N/A	1.30 in (33 mm)
SC740EPE18T	SC 740	18 in (460 mm)	19.70 in (500 mm)	10.72 in (272 mm)	5.00 in (127 mm)	N/A
SC740EPE18B	SC 740	18 in (460 mm)	19.70 in (500 mm)	10.72 in (272 mm)	N/A	1.60 in (41 mm)
SC740EPE24B	SC 740	24 in (600 mm)	18.50 in (470 mm)	9.45 in (240 mm)	N/A	0.10 in (3 mm)

NOTE: ALL DIMENSIONS ARE NOMINAL

ALL STUBS, EXCEPT FOR THE SC740EPE24B ARE PLACED AT BOTTOM OF END CAP SUCH THAT THE OUTSIDE DIAMETER OF THE STUB IS FLUSH WITH THE BOTTOM OF THE END CAP. FOR ADDITIONAL INFORMATION CONTACT STORMTECH AT 1-888-892-2694.

* FOR THE SC740EPE24B THE 24" STUB LIES BELOW THE BOTTOM OF THE END CAP APPROXIMATELY 1.75". BACKFILL MATERIAL SHOULD BE REMOVED FROM BELOW THE N-12 STUB SO THAT THE FITTING SETS LEVEL.

TECHNICAL SPECIFICATIONS

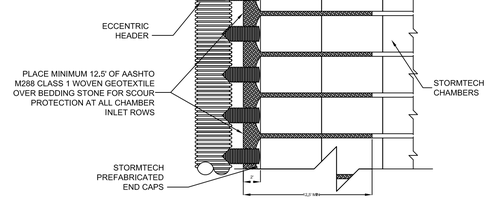

STORMTECH ISOLATOR ROW MANIFOLD DETAIL

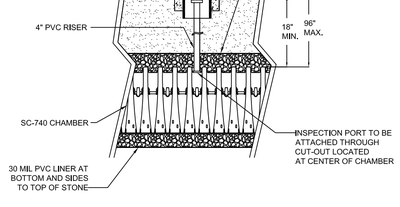

STORMTECH INSPECTION PORT DETAIL

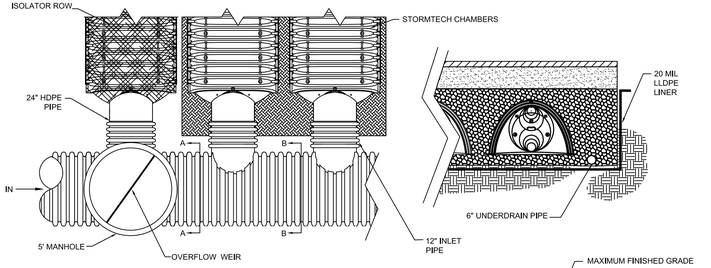

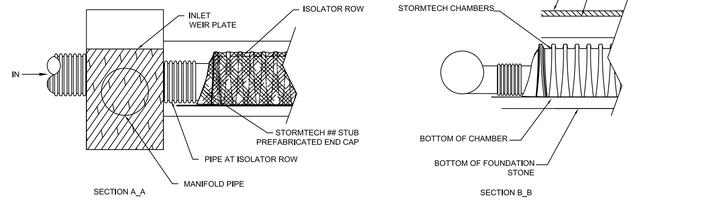

STORMTECH ELEVATIONS

STORMTECH GENERAL NOTES

1. STORMTECH LLC ("STORMTECH") REQUIRES INSTALLING CONTRACTORS TO USE AND UNDERSTAND STORMTECH'S LATEST INSTALLATION INSTRUCTIONS PRIOR TO BEGINNING SYSTEM INSTALLATION.
2. OUR TECHNICAL SERVICES DEPARTMENT OFFERS INSTALLATION CONSULTATIONS TO INSTALLING CONTRACTORS. CONTACT OUR TECHNICAL SERVICES REPRESENTATIVE AT LEAST 30 DAYS PRIOR TO SYSTEM INSTALLATION TO ARRANGE A PRE-INSTALLATION CONSULTATION. OUR REPRESENTATIVES CAN THEN ANSWER QUESTIONS OR ADDRESS COMMENTS ON THE STORMTECH CHAMBER SYSTEM AND INFORM THE INSTALLING CONTRACTOR OF THE MINIMUM INSTALLATION REQUIREMENTS BEFORE BEGINNING THE SYSTEM'S CONSTRUCTION. CALL **1-888-892-2694** TO SPEAK TO A TECHNICAL SERVICE REPRESENTATIVE OR VISIT **WWW.STORMTECH.COM** TO RECEIVE A COPY OF OUR INSTALLATION INSTRUCTIONS.
3. STORMTECH'S REQUIREMENTS FOR SYSTEMS WITH PAVEMENT DESIGN (ASPHALT, CONCRETE PAVERS, ETC.): MINIMUM COVER IS 18 INCHES NOT INCLUDING PAVEMENT; MAXIMUM COVER IS 96 INCHES INCLUDING PAVEMENT. FOR INSTALLATIONS THAT DO NOT INCLUDE PAVEMENT, WHERE RUTTING FROM VEHICLES MAY OCCUR, MINIMUM REQUIRED COVER IS 24 INCHES, MAXIMUM COVER IS 96 INCHES.
4. THE CONTRACTOR MUST REPORT ANY DISCREPANCIES WITH CHAMBER FOUNDATION MATERIALS BEARING CAPACITIES TO THE DESIGN ENGINEER.
5. AASHTO M288 CLASS 2 NON-WOVEN GEOTEXTILE (FILTER FABRIC) MUST BE USED AS INDICATED IN THE PROJECT PLANS.
6. STONE PLACEMENT BETWEEN CHAMBERS ROWS AND AROUND PERIMETER MUST FOLLOW INSTRUCTIONS AS INDICATED IN THE MOST CURRENT VERSION OF STORMTECH'S INSTALLATION INSTRUCTIONS.
7. BACKFILLING OVER THE CHAMBERS MUST FOLLOW REQUIREMENTS AS INDICATED IN THE MOST CURRENT VERSION OF STORMTECH'S INSTALLATION INSTRUCTIONS.
8. THE CONTRACTOR MUST REFER TO STORMTECH'S INSTALLATION INSTRUCTIONS FOR A TABLE OF ACCEPTABLE VEHICLE LOADS AT VARIOUS DEPTHS OF COVER. THIS INFORMATION IS ALSO AVAILABLE AT STORMTECH'S WEBSITE: **WWW.STORMTECH.COM.** THE CONTRACTOR IS RESPONSIBLE FOR PREVENTING VEHICLES THAT EXCEED STORMTECH'S REQUIREMENTS FROM TRAVELING ACROSS OR PARKING OVER THE STORMWATER SYSTEM. TEMPORARY FENCING, WARNING TAPE AND APPROPRIATELY LOCATED SIGNS ARE COMMONLY USED TO PREVENT UNAUTHORIZED VEHICLES FROM ENTERING SENSITIVE CONSTRUCTION AREAS.
9. THE CONTRACTOR MUST APPLY EROSION AND SEDIMENT CONTROL MEASURES TO PROTECT THE STORMWATER SYSTEM DURING ALL PHASES OF SITE CONSTRUCTION PER LOCAL CODES AND DESIGN ENGINEER'S SPECIFICATIONS.
10. STORMTECH PRODUCT WARRANTY IS LIMITED. SEE CURRENT PRODUCT WARRANTY FOR DETAILS. TO ACQUIRE A COPY CALL STORMTECH AT **1-888-892-2694** OR VISIT **WWW.STORMTECH.COM.**

MATERIAL LOCATION	DESCRIPTION	AASHTO M43 DESIGNATION	AASHTO M145 DESIGNATION	COMPACTION/DENSITY REQUIREMENT
D FILL MATERIAL FROM 18" TO GRADE ABOVE CHAMBERS	ANY SOIL/ROCK MATERIALS, NATIVE SOILS OR PER ENGINEER'S PLANS. CHECK PLANS FOR PAVEMENT SUBGRADE REQUIREMENTS.	N/A	N/A	PREPARE PER ENGINEER'S PLANS. PAVED INSTALLATIONS MAY HAVE STRINGENT MATERIAL AND PREPARATION REQUIREMENTS.
C FILL MATERIAL FOR 6" TO 18" ELEVATION ABOVE CHAMBERS (24" FOR UNPAVED INSTALLATIONS)	GRANULAR WELL-GRADED SOIL/AGGREGATE MIXTURES, <35% FINES.	3, 357, 4, 467, 5, 56, 57, 6, 67, 68, 7, 78, 8, 89, 9, 10	A-1 A-2 A-3	COMPACT IN 6" LIFTS TO A MINIMUM 95% STANDARD PROCTOR DENSITY. ROLLER GROSS VEHICLE WEIGHT NOT TO EXCEED 12,000 LBS. DYNAMIC FORCE NOT TO EXCEED 20,000 LBS.
B EMBEDMENT STONE SURROUNDING AND TO A 6" ELEVATION ABOVE CHAMBERS	WASHED ANGULAR STONE WITH THE MAJORITY OF PARTICLES BETWEEN ¾ - 2 INCH	3, 357, 4, 467, 5, 56, 57	N/A	NO COMPACTION REQUIRED
A FOUNDATION STONE BELOW CHAMBERS	WASHED ANGULAR STONE WITH THE MAJORITY OF PARTICLES BETWEEN ¾ - 2 INCH	3, 357, 4, 467, 5, 56, 57	N/A	PLATE COMPACT OR ROLL TO ACHIEVE A 95% STANDARD PROCTOR DENSITY

PLEASE NOTE: THE LISTED AASHTO DESIGNATIONS ARE FOR GRADATIONS ONLY. THE STONE MUST ALSO BE WASHED CRUSHED ANGULAR. FOR EXAMPLE, THE STONE MUST BE SPECIFIED AS WASHED, CRUSHED, ANGULAR NO. 4 STONE.

STORMTECH ACCEPTABLE FILL MATERIALS

ISSUED FOR:
FINAL TOWN APPROVAL

ISSUE DATE:
MAY 23, 2018

REVISIONS

NO.	DESCRIPTION	BY	DATE
0	PB SUBMISSION	JKC	12/05/17
1	100% D.D.	JKC	12/22/17
2	NHDES AoT SUBMISSION	JKC	1/18/18
3	50% C.D.	JKC	2/16/18
4	PERMIT SET	JKC	3/16/18
5	BID SET	JKC	4/02/18
6	100% C.D.	JKC	4/13/18
7	FINAL TOWN APPROVAL	JKC	5/23/18

DRAWN BY: RMB
APPROVED BY: JKC
DRAWING FILE: 4836DS.DWG

SCALE: N.T.S.

LAND OWNER – SUBJECT PARCEL:
RIVERWOODS DURHAM
5 WHITE OAK DRIVE
EXETER, NH 03833

APPLICANT:
THE RIVERWOODS GROUP
5 WHITE OAK DRIVE
EXETER, NH 03833

PROJECT:
RIVERWOODS DURHAM
STONE QUARRY DRIVE
DURHAM, NH

TITLE:
STORMWATER MANAGEMENT GALLERY – DETAILS

SHEET NUMBER:
C - 5.10

P4836

ACCEPTABLE FILL MATERIALS: STORMTECH MC-3500 CHAMBER SYSTEMS

	MATERIAL LOCATION	DESCRIPTION	AASHTO MATERIAL CLASSIFICATIONS	COMPACTION / DENSITY REQUIREMENT
D	**FINAL FILL:** FILL MATERIAL FOR LAYER 'D' STARTS FROM THE TOP OF THE 'C' LAYER TO THE BOTTOM OF FLEXIBLE PAVEMENT OR UNPAVED FINISHED GRADE ABOVE. NOTE THAT PAVEMENT SUBBASE MAY BE PART OF THE 'D' LAYER	ANY SOIL/ROCK MATERIALS, NATIVE SOILS, OR PER ENGINEER'S PLANS. CHECK PLANS FOR PAVEMENT SUBGRADE REQUIREMENTS.	N/A	PREPARE PER SITE DESIGN ENGINEER'S PLANS. PAVED INSTALLATIONS MAY HAVE STRINGENT MATERIAL AND PREPARATION REQUIREMENTS.
C	**INITIAL FILL:** FILL MATERIAL FOR LAYER 'C' STARTS FROM THE TOP OF THE EMBEDMENT STONE ('B' LAYER) TO 24" (600 mm) ABOVE THE TOP OF THE CHAMBER. NOTE THAT PAVEMENT SUBBASE MAY BE A PART OF THE 'C' LAYER.	GRANULAR WELL-GRADED SOIL/AGGREGATE MIXTURES, <35% FINES OR PROCESSED AGGREGATE. MOST PAVEMENT SUBBASE MATERIALS CAN BE USED IN LIEU OF THIS LAYER.	AASHTO M145[1] A-1, A-2-4, A-3 OR AASHTO M43[1] 3, 357, 4, 467, 5, 56, 57, 6, 67, 68, 7, 78, 8, 89, 9, 10	BEGIN COMPACTIONS AFTER 24" (600 mm) OF MATERIAL OVER THE CHAMBERS IS REACHED. COMPACT ADDITIONAL LAYERS IN 12" (300 mm) MAX LIFTS TO A MIN. 95% PROCTOR DENSITY FOR WELL GRADED MATERIAL AND 95% RELATIVE DENSITY FOR PROCESSED AGGREGATE MATERIALS.
B	**EMBEDMENT STONE:** FILL SURROUNDING THE CHAMBERS FROM THE FOUNDATION STONE ('A' LAYER) TO THE 'C' LAYER ABOVE.	CLEAN, CRUSHED, ANGULAR STONE	AASHTO M43[1] 3, 4	NO COMPACTION REQUIRED.
A	**FOUNDATION STONE:** FILL BELOW CHAMBERS FROM THE SUBGRADE UP TO THE FOOT (BOTTOM) OF THE CHAMBER.	CLEAN, CRUSHED, ANGULAR STONE	AASHTO M43[1] 3, 4	PLATE COMPACT OR ROLL TO ACHIEVE A FLAT SURFACE. [2 3]

PLEASE NOTE:
1. THE LISTED AASHTO DESIGNATIONS ARE FOR GRADATIONS ONLY. THE STONE MUST ALSO BE CLEAN, CRUSHED, ANGULAR. FOR EXAMPLE, A SPECIFICATION FOR #4 STONE WOULD STATE: "CLEAN, CRUSHED, ANGULAR NO. 4 (AASHTO M43) STONE".
2. STORMTECH COMPACTION REQUIREMENTS ARE MET FOR 'A' LOCATION MATERIALS WHEN PLACED AND COMPACTED IN 9" (230 mm) (MAX) LIFTS USING TWO FULL COVERAGES WITH A VIBRATORY COMPACTOR.
3. WHERE INFILTRATION SURFACES MAY BE COMPROMISED BY COMPACTION, FOR STANDARD DESIGN LOAD CONDITIONS, A FLAT SURFACE MAY BE ACHIEVED BY RAKING OR DRAGGING WITHOUT COMPACTION EQUIPMENT. FOR SPECIAL LOAD DESIGNS, CONTACT STORMTECH FOR COMPACTION REQUIREMENTS.

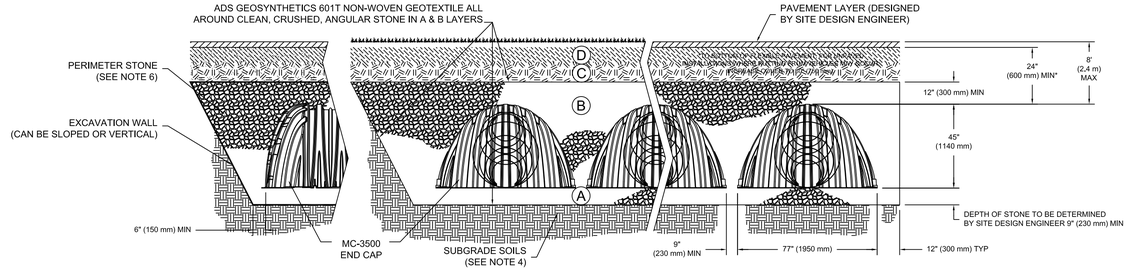

*FOR COVER DEPTHS GREATER THAN 8.0' (2.4 m) PLEASE CONTACT STORMTECH

NOTES:

1. MC-3500 CHAMBERS SHALL CONFORM TO THE REQUIREMENTS OF ASTM F2418 "STANDARD SPECIFICATION FOR POLYPROPYLENE (PP) CORRUGATED WALL STORMWATER COLLECTION CHAMBERS".
2. MC-3500 CHAMBERS SHALL BE DESIGNED IN ACCORDANCE WITH ASTM F2787 "STANDARD PRACTICE FOR STRUCTURAL DESIGN OF THERMOPLASTIC CORRUGATED WALL STORMWATER COLLECTION CHAMBERS".
3. "ACCEPTABLE FILL MATERIALS" TABLE ABOVE PROVIDES MATERIAL LOCATIONS, DESCRIPTIONS, GRADATIONS, AND COMPACTION REQUIREMENTS FOR FOUNDATION, EMBEDMENT, AND FILL MATERIALS.
4. THE SITE DESIGN ENGINEER IS RESPONSIBLE FOR ASSESSING THE BEARING RESISTANCE (ALLOWABLE BEARING CAPACITY) OF THE SUBGRADE SOILS AND THE DEPTH OF FOUNDATION STONE WITH CONSIDERATION FOR THE RANGE OF EXPECTED SOIL MOISTURE CONDITIONS.
   PERIMETER STONE MUST BE EXTENDED HORIZONTALLY TO THE EXCAVATION WALL FOR BOTH VERTICAL AND SLOPED EXCAVATION WALLS.
5. ONCE LAYER 'C' IS PLACED, ANY SOIL/MATERIAL CAN BE PLACED IN LAYER 'D' UP TO THE FINISHED GRADE. MOST PAVEMENT SUBBASE SOILS CAN BE USED TO REPLACE THE MATERIAL REQUIREMENTS OF LAYER 'C' OR 'D' AT THE SITE DESIGN ENGINEER'S DISCRETION.

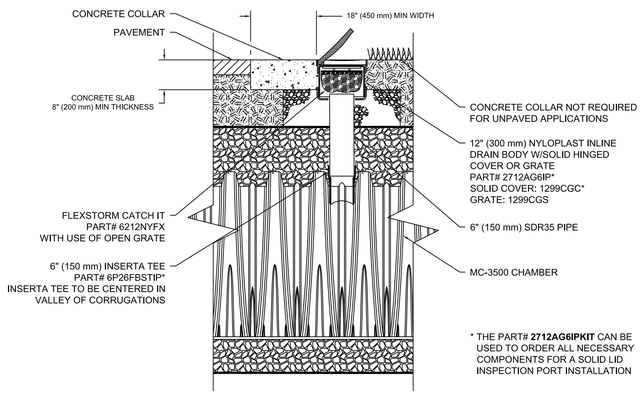

MC-3500 6" INSPECTION PORT DETAIL

NTS

FINAL APPROVAL BY DURHAM PLANNING BOARD.
CERTIFIED BY MICHAEL BEHRENDT, TOWN PLANNER
CERTIFIED _____
DATE _____

MC-3500 TECHNICAL SPECIFICATION

NTS

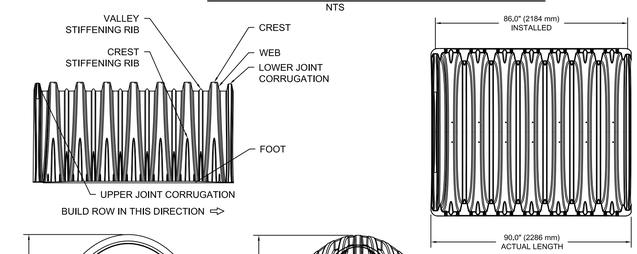

NOMINAL CHAMBER SPECIFICATIONS

SIZE (W X H X INSTALLED LENGTH)	77.0" X 45.0" X 86.0"	(1956 mm X 1143 mm X 2184 mm)
CHAMBER STORAGE	109.9 CUBIC FEET	(3.11 m³)
MINIMUM INSTALLED STORAGE*	178.9 CUBIC FEET	(5.06 m³)
WEIGHT	135.0 lbs.	(61.2 kg)

NOMINAL END CAP SPECIFICATIONS

SIZE (W X H X INSTALLED LENGTH)	77.0" X 45.0" X 22.5"	(1956 mm X 1143 mm X 571 mm)
END CAP STORAGE	14.9 CUBIC FEET	(0.42 m³)
MINIMUM INSTALLED STORAGE*	46.0 CUBIC FEET	(1.30 m³)
WEIGHT	50.0 lbs.	(22.7 kg)

*ASSUMES 12" (305 mm) STONE ABOVE, 9" (229 mm) STONE FOUNDATION AND BETWEEN CHAMBERS, 12" (305 mm) STONE PERIMETER IN FRONT OF END CAPS AND 40% STONE POROSITY

STUBS AT BOTTOM OF END CAP FOR PART NUMBERS ENDING WITH "B"
STUBS AT TOP OF END CAP FOR PART NUMBERS ENDING WITH "T"
END CAPS WITH A WELDED CROWN PLATE END WITH "C"
END CAPS WITH A PREFABRICATED WELDED STUB END WITH "W"

PART #	STUB	B	C
MC3500IEPP06T	6" (150 mm)	33.21" (844 mm)	---
MC3500IEPP06B		---	0.66" (17 mm)
MC3500IEPP08T	8" (200 mm)	31.16" (791 mm)	---
MC3500IEPP08B		---	0.81" (21 mm)
MC3500IEPP10T	10" (250 mm)	29.04" (738 mm)	---
MC3500IEPP10B		---	0.93" (24 mm)
MC3500IEPP12T	12" (300 mm)	26.36" (670 mm)	---
MC3500IEPP12B		---	1.35" (34 mm)
MC3500IEPP15T	15" (375 mm)	23.39" (594 mm)	---
MC3500IEPP15B		---	1.50" (38 mm)
MC3500IEPP18TC	18" (450 mm)	---	20.03" (509 mm)	---
MC3500IEPP18TW				
MC3500IEPP18BC		---	1.77" (45 mm)
MC3500IEPP18BW			
MC3500IEPP24TC	24" (600 mm)	14.48" (368 mm)	---
MC3500IEPP24TW			
MC3500IEPP24BC		---	2.06" (52 mm)
MC3500IEPP24BW			
MC3500IEPP30BC	30" (750 mm)	---	2.75" (70 mm)

NOTE: ALL DIMENSIONS ARE NOMINAL

CUSTOM PRECORED INVERTS ARE AVAILABLE UPON REQUEST. INVENTORIED MANIFOLDS INCLUDE 12-24" (300-600 mm) SIZE ON SIZE AND 15-48" (375-1200 mm) ECCENTRIC MANIFOLDS. CUSTOM INVERT LOCATIONS ON THE MC-3500 END CAP CUT IN THE FIELD ARE NOT RECOMMENDED FOR PIPE SIZES GREATER THAN 10" (250 mm). THE INVERT LOCATION IN COLUMN 'B' ARE THE HIGHEST POSSIBLE FOR THE PIPE SIZE.

ALTUS ENGINEERING, INC.
133 COURT STREET PORTSMOUTH, NH 03801
VOICE: (603) 433-2335
FAX: (603) 433-4194

JEFFREY K. CLIFFORD No. 6524 LICENSED PROFESSIONAL ENGINEER STATE OF NEW HAMPSHIRE

ISSUED FOR:
FINAL TOWN APPROVAL

ISSUE DATE:
MAY 23, 2018

REVISIONS

NO.	DESCRIPTION	BY	DATE
0	PB SUBMISSION	JKC	12/05/17
1	100% D.D.	JKC	12/22/17
2	NHDES AoT SUBMISSION	JKC	1/18/18
3	50% C.D.	JKC	2/16/18
4	PERMIT SET	JKC	3/16/18
5	BID SET	JKC	4/02/18
6	100% C.D.	JKC	4/13/18
7	FINAL TOWN APPROVAL	JKC	5/23/18

DRAWN BY: RMB
APPROVED BY: JKC
DRAWING FILE: 4836DS.DWG

SCALE: N.T.S.

LAND OWNER – SUBJECT PARCEL:
RIVERWOODS DURHAM
5 WHITE OAK DRIVE
EXETER, NH 03833

APPLICANT:
THE RIVERWOODS GROUP
5 WHITE OAK DRIVE
EXETER, NH 03833

PROJECT:
RIVERWOODS DURHAM
STONE QUARRY DRIVE
DURHAM, NH

TITLE:
STORMWATER MANAGEMENT GALLERY – DETAILS

SHEET NUMBER:
C - 5.11

P4836

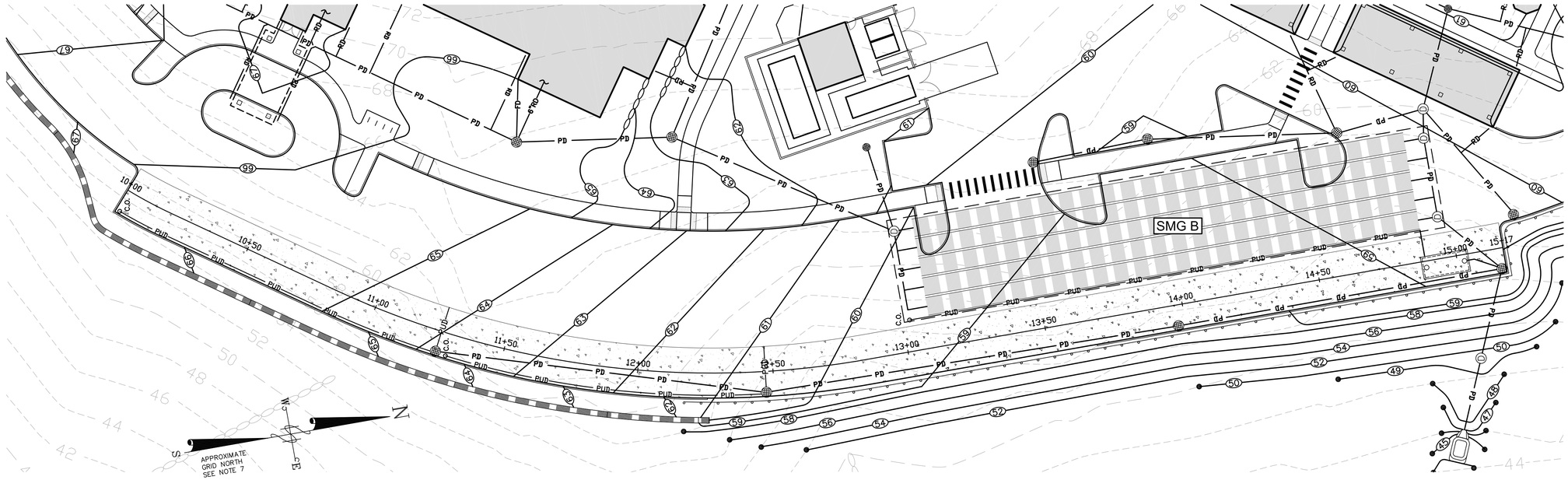

GRAPHIC SCALE

20 0 10 20 40 80

(IN FEET)
1 inch = 20 ft.

PROFILE –
CENTERLINE OF PARKING STALLS

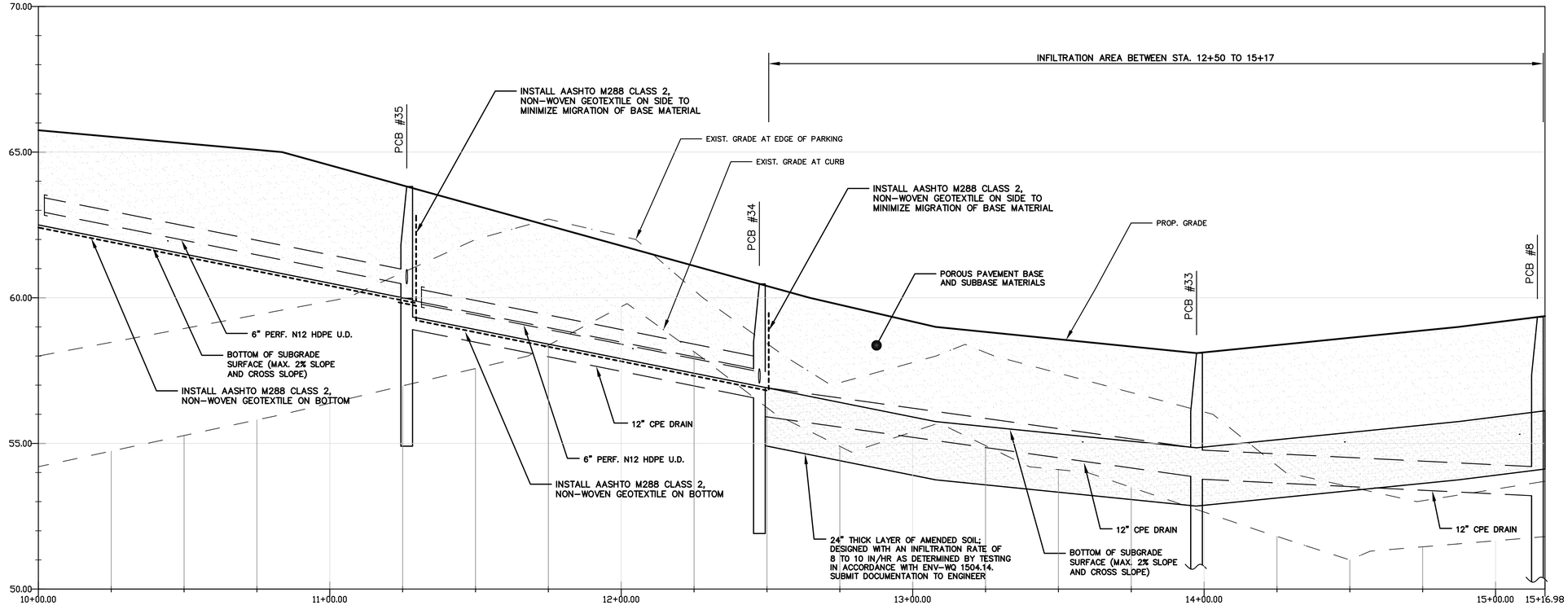

POROUS PAVEMENT SECTION

HORIZONTAL SCALE: 1" = 20'
VERTICAL SCALE: 1" = 2'

ALTUS ENGINEERING, INC.
133 COURT STREET PORTSMOUTH, NH 03801
VOICE: (603) 433-2335
FAX: (603) 433-4194

STATE OF NEW HAMPSHIRE
JEFFREY K. CLIFFORD
No. 6524
LICENSED PROFESSIONAL ENGINEER

ISSUED FOR:
FINAL TOWN APPROVAL

ISSUE DATE:
MAY 23, 2018

REVISIONS

NO.	DESCRIPTION	BY	DATE
0	PB SUBMISSION	JKC	12/05/17
1	100% D.D.	JKC	12/22/17
2	NHDES AoT SUBMISSION	JKC	1/18/18
3	50% C.D.	JKC	2/16/18
4	PERMIT SET	JKC	3/16/18
5	BID SET	JKC	4/02/18
6	100% C.D.	JKC	4/13/18
7	FINAL TOWN APPROVAL	JKC	5/23/18

DRAWN BY: RMB
APPROVED BY: JKC
DRAWING FILE: 4836SITE.DWG

SCALE: 1 " = 20'

LAND OWNER – SUBJECT PARCEL:
RIVERWOODS DURHAM
5 WHITE OAK DRIVE
EXETER, NH 03833

APPLICANT:
THE RIVERWOODS GROUP
5 WHITE OAK DRIVE
EXETER, NH 03833

PROJECT:
RIVERWOODS DURHAM
STONE QUARRY DRIVE
DURHAM, NH

TITLE:
POROUS PAVEMENT EAST – PROFILE

SHEET NUMBER:
C - 5.12

P4836

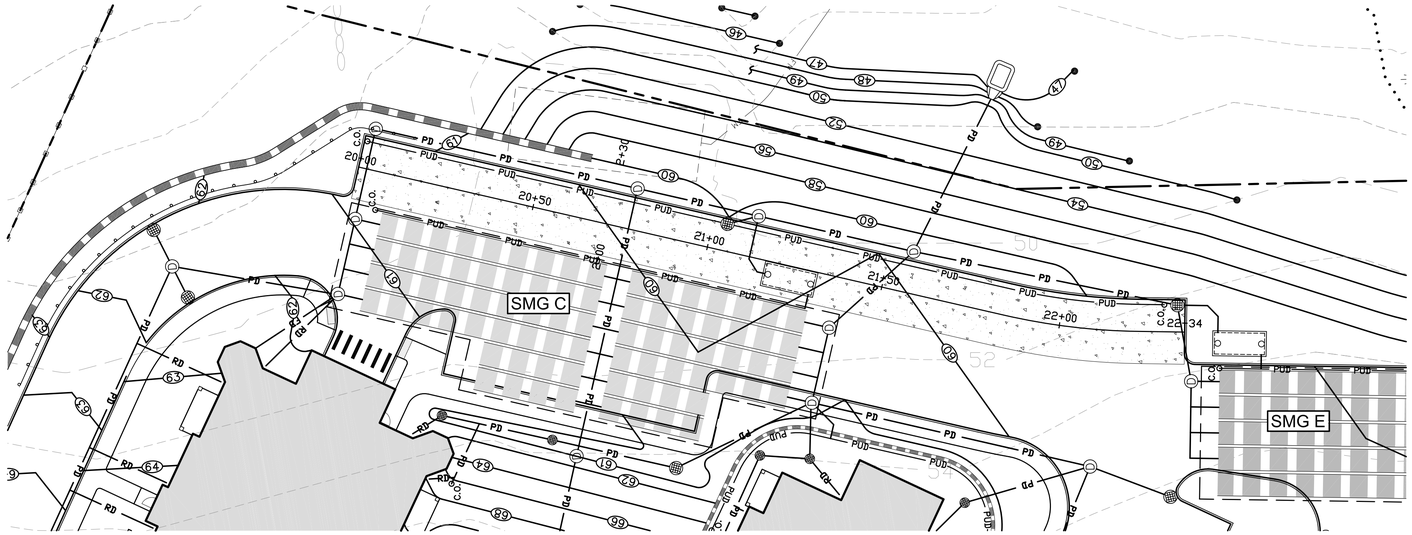

GRAPHIC SCALE

20 0 10 20 40 80

(IN FEET)
1 inch = 20 ft.

PROFILE –
CENTERLINE OF PARKING STALLS

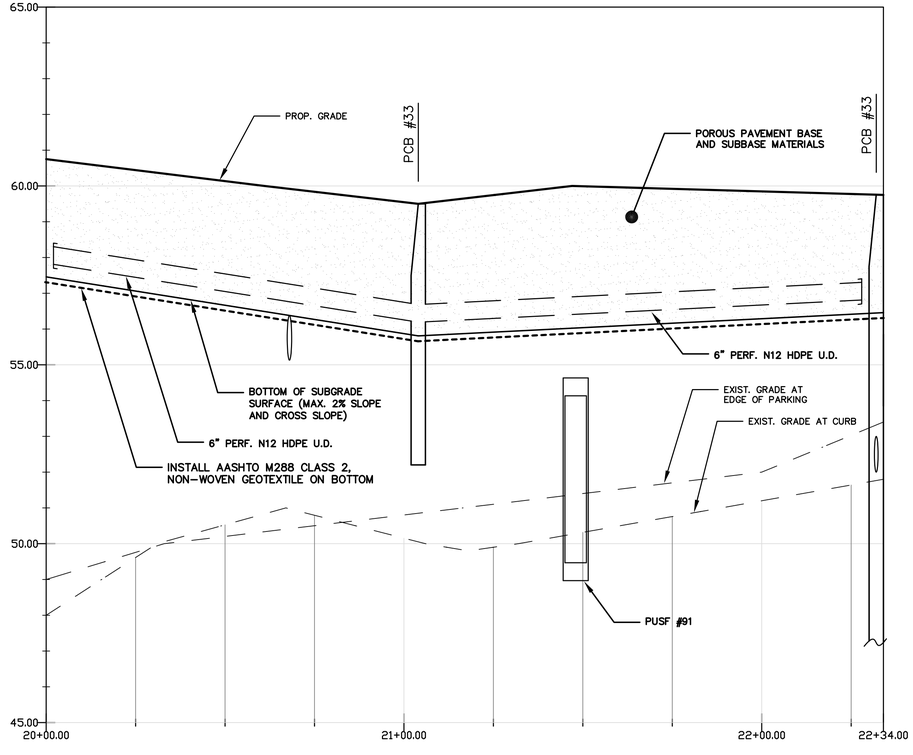

POROUS PAVEMENT SECTION

HORIZONTAL SCALE: 1" = 20'
VERTICAL SCALE: 1" = 2'

ALTUS
ENGINEERING, INC.
133 COURT STREET PORTSMOUTH, NH 03801
VOICE: (603) 433-2335
FAX: (603) 433-4194

JEFFREY K. CLIFFORD No. 6524 LICENSED PROFESSIONAL ENGINEER STATE OF NEW HAMPSHIRE

ISSUED FOR:
FINAL TOWN APPROVAL

ISSUE DATE:
MAY 23, 2018

REVISIONS

NO.	DESCRIPTION	BY	DATE
0	PB SUBMISSION	JKC	12/05/17
1	100% D.D.	JKC	12/22/17
2	NHDES AoT SUBMISSION	JKC	1/18/18
3	50% C.D.	JKC	2/16/18
4	PERMIT SET	JKC	3/16/18
5	BID SET	JKC	4/02/18
6	100% C.D.	JKC	4/13/18
7	FINAL TOWN APPROVAL	JKC	5/23/18

DRAWN BY: RMB
APPROVED BY: JKC
DRAWING FILE: 4836SITE.DWG

SCALE: 1 " = 20'

LAND OWNER – SUBJECT PARCEL:
RIVERWOODS DURHAM
5 WHITE OAK DRIVE
EXETER, NH 03833

APPLICANT:
THE RIVERWOODS GROUP
5 WHITE OAK DRIVE
EXETER, NH 03833

PROJECT:
RIVERWOODS DURHAM
STONE QUARRY DRIVE
DURHAM, NH

TITLE:
POROUS PAVEMENT WEST – PROFILE

SHEET NUMBER:
C - 5.13

P4836

LANDSCAPE NOTES

1. Design is based on drawings by Altus Engineering dated January 10, 2018 and may require adjustment due to actual field conditions.
2. The contractor shall follow best management practices during construction and shall take all means necessary to stabilize and protect the site from erosion.
3. Erosion Control shall be in place prior to construction.
4. The Contractor shall verify layout and grades and inform the Landscape Architect or Client's Representative of any discrepancies or changes in layout and/or grade relationships prior to construction.
5. It is the contractor's responsibility to verify drawings provided are to the correct scale prior to any bid, estimate or installation. A graphic scale bar has been provided on each sheet for this purpose. If it is determined that the scale of the drawing is incorrect, the landscape architect will provide a set of drawings at the correct scale, at the request of the contractor.
6. Location, support, protection, and restoration of all existing utilities and appurtenances shall be the responsibility of the Contractor.
7. The Contractor shall verify exact location and elevation of all utilities with the respective utility owners prior to construction. Call DIGSAFE at 1-888-344-7233.
8. The Contractor shall procure any required permits prior to construction.
9. Prior to any landscape construction activities Contractor shall test all existing loam and loam from off-site intended to be used for lawns and plant beds using a thorough sampling throughout the supply. Soil testing shall indicate levels of pH, nitrates, macro and micro nutrients, texture, soluble salts, and organic matter. Contractor shall provide Landscape Architect with test results and recommendations from the testing facility along with soil amendment plans as necessary for the proposed plantings to thrive. All loam to be used on site shall be amended as approved by the Landscape Architect prior to placement.
10. Contractor shall notify landscape architect or owner's representative immediately if at any point during demolition or construction a site condition is discovered which may negatively impact the completed project. This includes, but is not limited to, unforeseen drainage problems, unknown subsurface conditions, and discrepancies between the plan and the site. If a contractor is aware of a potential issue, and does not bring it to the attention of the landscape architect or owner's representative immediately, they may be responsible for the labor and materials associated with correcting the problem.
11. The Contractor shall furnish and plant all plants shown on the drawings and listed thereon. All plants shall be nursery-grown under climatic conditions similar to those in the locality of the project. Plants shall conform to the botanical names and standards of size, culture, and quality for the highest grades and standards as adopted by the American Association of Nurserymen, Inc. in the American Standard of Nursery Stock ANSI Z60.1, American Standards Institute, Inc. 230 Southern Building, Washington, D.C. 20005.
12. A complete list of plants, including a schedule of sizes, quantities, and other requirements is shown on the drawings. In the event that quantity discrepancies or material omissions occur in the plant materials list, the planting plans shall govern.
13. All plants shall be legibly tagged with proper botanical name.
14. The Contractor shall guarantee all plants for not less than one year from time of acceptance.
15. Owner or Owner's Representative will inspect plants upon delivery for conformity to Specification requirements. Such approval shall not affect the right of inspection and rejection during or after the progress of the work. The Owner reserves the right to inspect and/or select all trees at the place of growth and reserves the right to approve a representative sample of each type of shrub, herbaceous perennial, annual, and ground cover at the place of growth. Such sample will serve as a minimum standard for all plants of the same species used in this work.
16. No substitutions of plants may be made without prior approval of the Owner or the Owner's Representative for any reason.
17. Trees should be planted using commonly accepted best management practices, such as those listed in ANSI A300 Part 6: Tree Maintenance Standard Practices (Transplanting), which is available from the International Society of Landscape Architects.
18. The contractor shall ensure that there is adequate rooting space and overhead space and fit for the trees to be installed
19. Only low phosphorus/slow release nitrogen fertilizers for landscaping materials may be used throughout the property.
20. Upon completion, contractor shall provide water and other tree care as appropriate during the first growing season (May through October).
21. All landscaping shall be provided with an underground sprinkling system. Install appropriate PVC underground sleeves as needed.
22. All irrigation valve boxes shall be located within plant bed areas.
23. All disturbed areas will be dressed with 6" of topsoil and planted as noted on the plans or seeded except plant beds. Plant beds shall be prepared to a depth of 12" with 75% loam and 25% compost.
24. Trees, ground cover, and shrub beds shall be mulched to a depth of 2" with one-year-old, well-composted, shredded native bark not longer than 4" in length and ½" in width, free of woodchips and sawdust. Mulch for ferns and herbaceous perennials shall be no longer than 1" in length. Trees in lawn areas shall be mulched in a 5' diameter min. saucer. Color of mulch shall be dark brown with no dyes.
25. In no case shall mulch touch the stem of a plant nor shall mulch ever be more than 3" thick total (including previously applied mulch) over the root ball of any plant.
26. Maintenance of Landscaping. The provision for maintenance of landscaping materials as specified in Section 175-124 – Maintenance Requirements of the Article XXII – Landscaping in the Durham Zoning Ordinance, shall apply.
27. Secondary lateral branches of deciduous trees overhanging vehicular and pedestrian travel ways shall be pruned up to a height of 6' to allow clear and safe passage of vehicles and pedestrians under tree canopy.
28. Landscape Architect is not responsible for the means and methods of the contractor.

PRICING NOTE

Contractor shall provide unit pricing for the following items:

- *All plants (price per plant installed)*
- *Irrgation sleeves (price per LF)*
- *Lawn loam & seed (price per SF)*
- *Plant bed prep - soil & mulch (price per SF)*

For details on the items listed above refer to plan notes & specifications

Contractor shall supply a well (or wells) sized to supply the proposed irrigation system requirements with a reserve capacity for future growth.

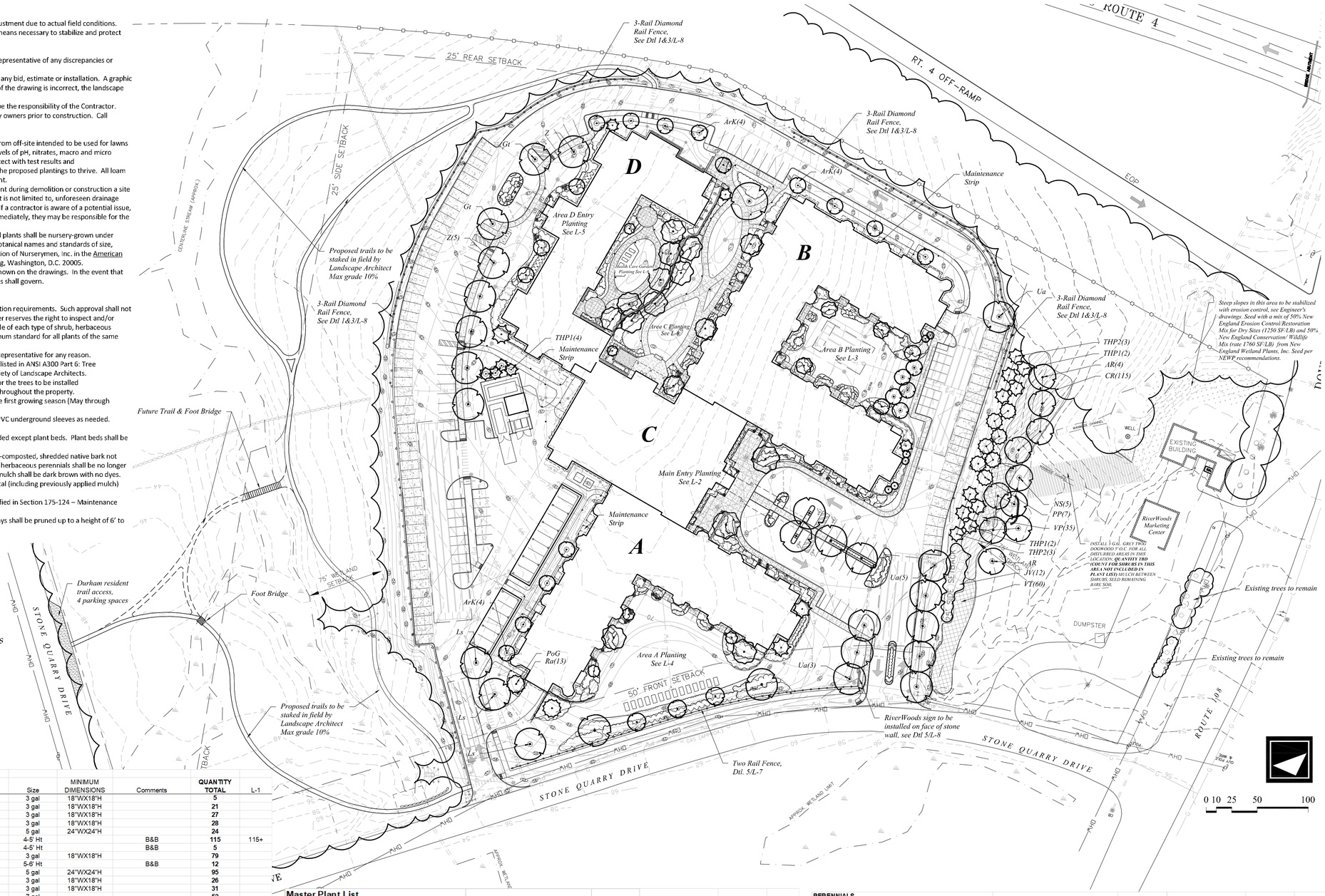

SHRUBS							
Symbol	Botanical Name	Common Name	Size	MINIMUM DIMENSIONS	Comments	QUANTITY TOTAL	L-1
Az1	*Azalea kiusianum 'Best Pink'*	Best Pink Azalea	3 gal	18"WX18"H		5	
Az2	*Azalea kiusianum 'White Form'*	White Form Azalea	3 gal	18"WX18"H		21	
Box	*Buxus microphylla 'Winter Gem'*	Winter Gem Boxwood	3 gal	18"WX18"H		27	
Cl	*Clethra alnifolia 'Hummingbird'*	Hummingbird Compact Summersweet	3 gal	18"WX18"H		28	
Cor	*Cornus alba 'Ivory Halo'*	Ivory Halo Dogwood	5 gal	24"WX24"H		24	
CR	*Cornus racemosa*	Grey Dogwood	4-5' Ht		B&B	115	115+
Enk	*Enkianthus campanulatus*	Redvein Enkianthus	4-5' Ht		B&B	5	
FOR	*Forsythia x intermedia 'Gold Tide'*	Dwarf Forsythia	3 gal	18"WX18"H		79	
Hs	*Hibiscus syriacus 'Blue Satin'*	Blue Satin Rose-of -Sharon	5-6' Ht		B&B	12	
HyA	*Hydrangea arborescens 'Annabelle'*	Annabelle Hydrangea	5 gal	24"WX24"H		95	
HyB	*Hydrangea paniculata 'Bobo'*	Bobo Hydrangea	3 gal	18"WX18"H		26	
HyE	*Hydrangea macrophylla 'Endless Summer'*	Endless Summer Hydrangea	3 gal	18"WX18"H		31	
HyL	*Hydrangea paniculata 'Little Lime'*	Little Lime Hydrangea	7 gal			52	
HyP	*Hydrangea anomela petiolaris*	Climbing Hydrangea	5 gal		STAKED	7	
HYPG	*Hydrangea paniculata 'Grandiflora'*	P.G. Hydrangea	5-6' Ht		B&B TREEFORM	3	
HyQ	*Hydrangea quercifolia 'Sikes Dwarf'*	Sike's Dwarf Hydrangea	5 gal	24"WX24"H		12	
HyQR	*Hydrangea quercifolia 'Ruby Slippers'*	Ruby Slippers Oakleaf Hydrangea	5 gal	24"WX24"H		4	
Ic	*Ilex crenata 'Green Lustre'*	Green Luster Japanese Holly	3 gal	18"WX18"H		49	
Ig	*Ilex glabra 'Compacta'*	Inkberry	5 gal	24"WX24"H		42	
It	*Itea virginica 'Little Henry'*	Little Henry Sweetspire	3 gal	18"WX18"H		25	
Jc	*Juniperus chinensis 'Sargenti'*	Sargent Juniper	3 gal	18"WX18"H		47	
Jsg	*Juniperus chinensis 'Seagreen'*	Seagreen Juniper	2-2.5' Ht		B&B	18	
KLE	*Kalmia latifolia 'Elf'*	Elf Dwarf Mountain Laurel	5 gal	24"WX24"H		14	
Leu	*Leucothoe fontanesiana 'Compacta'*	Compact Drooping Leucothoe	3 gal	18"WX18"H		108	
Md	*Microbiota decussata*	Russian Cypress	3 gal	18"WX18"H		28	
Mp	*Myrica pensylvanica*	Northern Bayberry	3-4' Ht		B&B FULL	44	
RhA	*Rhododendron 'Aglo'*	Aglo Rhododendron	2-2.5' Ht		B&B	24	
RhC	*Rhododendron 'Chionoides'*	Chionoides Rhododendron	2-2.5' Ht		B&B	18	
RhS	*Rhododendron 'Scintillation'*	Scintillation Rhododendron	2.5 - 3' Ht		B&B	15	
Ra	*Rhus aromatica 'Grow-Low'*	Grow Low Sumac	3 gal	18"WX18"H		145	13
ROS1	*Rosa 'Dwarf Pavement'*	Pink Fragrant Low semi-double Rose	3 gal	18"WX18"H		21	
Ros	*Rosa 'Knockout'*	Double Red Knockout Rose	3 gal	18"WX18"H		68	
SpA	*Spiraea x bumalda 'Anthony Waterer'*	Anthony Waterer Spirea	3 gal	18"WX18"H		29	
SpG	*Spiraea x 'Goldmound'*	Goldmound Spirea	3 gal	18"WX18"H		12	
SYB	*Syringa 'Bloomerang'*	Bloomerange Lilac	2.5-3' Ht		B&B	91	
SyP	*Syringa meyeri 'Palibin'*	Dwarf Korean Lilac	3-4' Ht		B&B	31	
Tax	*Taxus media 'Everlow'*	Everlow Yew	18-24' W		B&B	31	
ThT	*Thuja occidentalis 'Techny'*	Techny Arborvitae	6-7' Ht		B&B	4	
TmT	*Taxus media 'Tauntonii'*	Taunton Yew	3 gal	18"WX18"H		57	
VP	*Viburnum prunifolium*	Blackhaw Viburnum	4-5' Ht		B&B	43	35
VpT	*Viburnum plicatum tomentosum 'Mariesii'*	Marie's Doublefile Viburnum	4-5' Ht		B&B	1	
VT	*Viburnum trilobum*	American Cranberry Viburnum	4-5' Ht		B&B	60	60

Master Plant List

TREES					QUANTITY TOTAL	L-1
Symbol	Botanical Name	Common Name	Size	Comments		
Am	*Amelanchier x grandiflora 'Autumn Brilliance'*	Autumn Brilliance Serviceberry	8-10' Ht	B&B, Multi-stem	3	
AR	*Acer rubrum 'October Glory'*	October Glory Red Maple	3-3.5" Cal	B&B, Full	5	5
ArK	*Acer rubrum 'Karpick'*	Karpick Red Maple	3-3.5" Cal	B&B, Matched	9	8
Bn	*Betula nigra 'Heritage'*	Heritage River Birch	12-14' Ht	B&B, Multi-stem	16	
Cb	*Carpinus betulus 'Frans Fontaine'*	Hornbeam	3-3.5" Cal	B&B	3	
Cc	*Crataegus crus-galli 'Inermis'*	Thornless Cockspur Hawthorn	2-2.5" Cal	B&B	1	
Ck	*Cornus kousa*	Kousa Dogwood	8-10' Ht	B&B	2	
Gt	*Gleditsia triacanthos inermis 'Halka'*	Halka Thornless Honeylocust	3-3.5" Cal	B&B SPECIMEN	6	2
Ham	*Hamamelis x intermedia 'Arnold promise'*	Arnold Promise Witchhazel	6-8' Ht	B&B MULTISTEMMED	1	
LAB	*Laburnum x watereri 'Vossii'*	Golden Chain Tree	2-2.5" Cal	B&B	2	
Mag	*Magnolia stellata*	Star magnolia	8-10' Ht	B&B	1	
Mal	*Malus 'Donald Wyman'*	Donald Wyman Crabapple	2-2.5" Cal	B&B	1	
Ls	*Liquidambar styraciflua*	American Sweetgum	3-3.5" Cal	B&B	3	3
Jm	*Juniperus chinensis 'Mountbatten'*	Mountbatten Juniper	7-8' Ht	B&B	7	
JV	*Juniperus virginiana*	Eastern Red Cedar	7-8' Ht	B&B	12	12
Ns	*Nyssa Sylvatica*	Black Tupelo	3-3.5" Cal	B&B	5	5
Po	*Picea orientalis*	Oriental Spruce	8-10' Ht	B&B	1	
PoG	*Picea orientalis 'Gowdy'*	Gowdy Oriental Spruce	8-10' Ht	B&B	6	1
PP	*Picea pungens' Glauca'*	Colorado Blue Spruce	8-10' Ht	B&B	7	7
PSK	*Prunus serrulata 'Kwanzan'*	Kwanzan Cherry	2-2.5" Cal	B&B	3	
Qb	*Quercus bicolor*	Swamp White Oak	3-3.5" Cal	B&B	2	
THP1	*Thuja plicata 'Green Giant'*	Green Giant Arborvitae	12' Ht	B&B FULL	9	8
THP2	*Thuja plicata 'Green Giant'*	Green Giant Arborvitae	14' Ht	B&B FULL	6	6
Ua	*Ulmus americana 'Princeton'*	Princeton American Elm	3-3.5" Cal	B&B	9	9
Z	*Zelkova serrata 'Green Vase'*	Green Vase Zelkova	3-3.5" Cal	B&B	6	6

PERENNIALS					QUANTITY TOTAL	L-1
Symbol	Botanical Name	Common Name	Size	Comments		
AL	*Alchemilla mollis*	Lady's Mantle	1 gal		18	
Aj	*Ajuga reptans 'Burgandy Glow'*	Burgandy Glow Ajuga	1 gal		163	
An	*Anemone hupehensis 'September Charm'*	Japanese Anemone	1 gal		55	
Ast1	*Astilbe chinensis 'Finale'*	Light Pink Astilbe	1 gal		115	
Ast2	*Astilbe 'Deutschland'*	White Early Astilbe	1 gal		55	
Bap	*Baptisia australis*	False Blue Indigo	1 gal		3	
C	*Coreopsis grandiflora 'Uethro Tull'*	Tickseed	1 gal		12	
Cal	*Calamagrostis acutifolia 'Karl Foerster'*	Feather Reed Grass	1 gal		32	
Daf	*Daffodil Mix*					
	Narcissus 'King Alfred'		TOPSIZE		87	
	Narcissus 'Mount Hood'		TOPSIZE		87	
	Narcissus Sweet Harmony		TOPSIZE		87	
Day	*Daylily Mix*					
	Hemerocallis 'Big Time Happy'	Big Time Happy Daylily	1 gal	MIX EVENLY	58	
	Hemerocallis 'Siloam Double Classic'	Siloam Double Classic Daylily	1 gal		58	
	Hemerocallis 'Gordon Biggs'	Gordon Biggs Daylily	1 gal		56	
H1	*Hosta 'Frances Williams'*	Frances Williams Hosta	1 gal		21	
H2	*Hosta 'Sum and Substance'*	Sum and Substance Hosta	1 gal		14	
H3	*Hosta sieboldiana 'Elegans'*	Elegans Hosta	1 gal		12	
Ir	*Iris sibirica 'Ceasar's Brother*	Dark Pansy Purple Siberian Iris	1 gal		13	
Lam	*Lamium maculatum 'White nancy'*	White-Leaved Dead Nettle	1 gal		73	
Mis	*Miscanthus sinensis 'Morning Light'*	Morning Light Maiden Grass	1 gal		5	
Nep	*Nepeta faassenii x 'Walker's Low'*	Walker's low Catmint	1 gal		40	
Per	*Perovskia atriplicifolia 'Filigran'*	Russian Sage	1 gal		67	
Rud	*Rudbeckia fulgida 'Goldsturm'*	Bleck-Eyed Susan	1 gal		51	
Sal	*Salvia 'Carradonna'*	Salvia	1 gal		153	
Vm	*Vinca minor 'Bowles'*	Bowles Periwinkle	2.5" Pots	SET 8" ON CENTER	3620	

woodburn & company
LANDSCAPE ARCHITECTURE
103 Kent Place Newmarket, New Hampshire Phone: 603.659.5949

RiverWoods Durham

SITE LANDSCAPE PLAN

Stone Quarry Drive Durham, New Hampshire

Drawn By: VM
Checked By: RW
Scale: 1" = 50' - 0"
Date: July 19, 2017

Revisions: October 16, 2017
December 1, 2017
January 10, 2018
(50% CD) February 16, 2018
(Permit Set) March 16, 2018
(For Bid) April 2, 2018
100% CD April 13, 2018
Final Town Approval May 23, 2018

L-1

Sheet 1 of 8

© 2018 Woodburn & Company Landscape Architecture, LLC

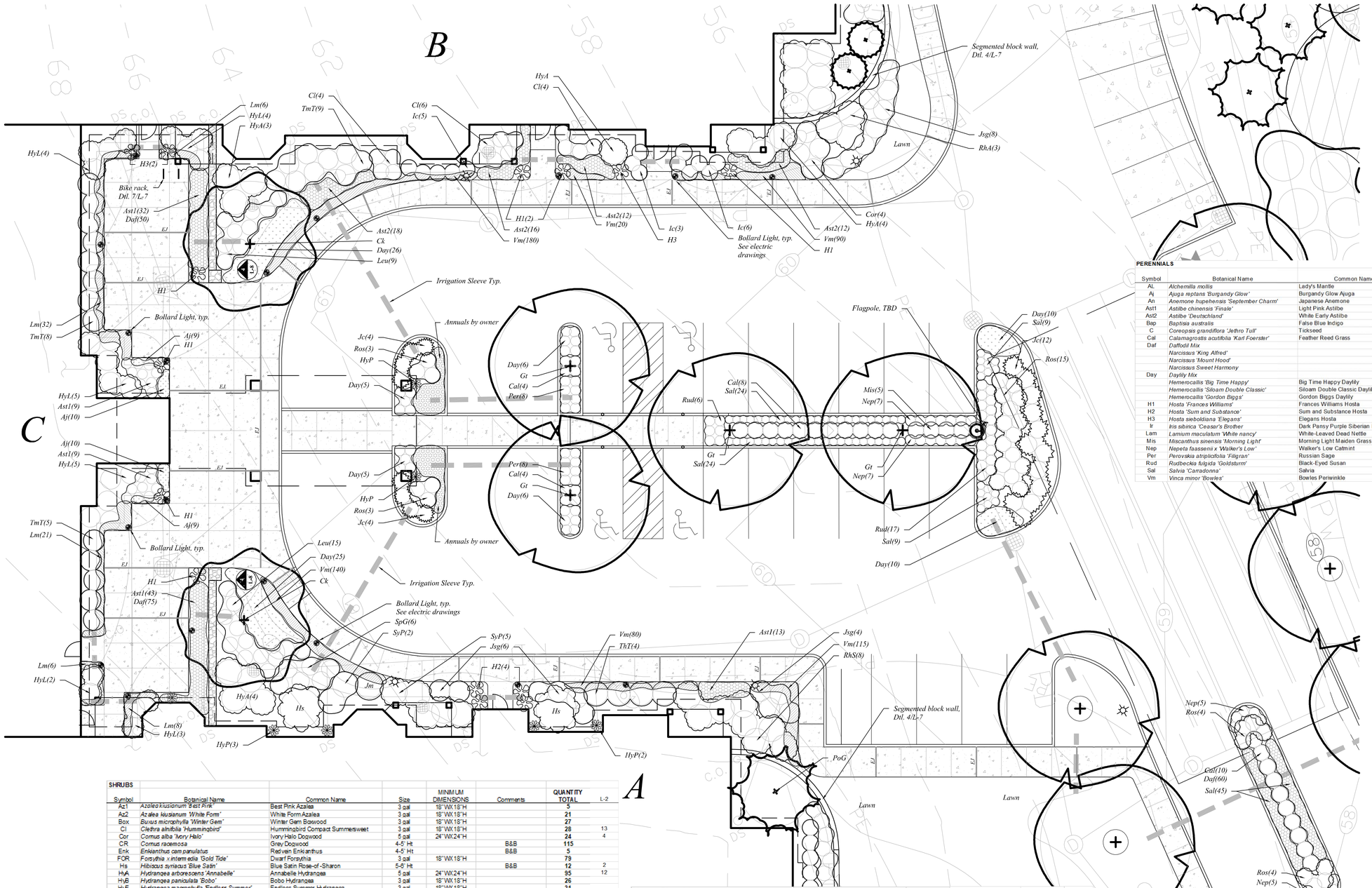

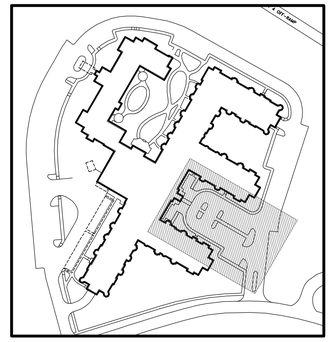

PERENNIALS

Symbol	Botanical Name	Common Name	Size	Comments	QUANTITY TOTAL	L-2
AL	*Alchemilla mollis*	Lady's Mantle	1 gal		18	
Aj	*Ajuga reptans 'Burgandy Glow'*	Burgandy Glow Ajuga	1 gal		163	38
An	*Anemone hupehensis 'September Charm'*	Japanese Anemone	1 gal		55	
Ast1	*Astibe chinensis 'Finale'*	Light Pink Astilbe	1 gal		115	109
Ast2	*Astilbe 'Deutschland'*	White Early Astilbe	1 gal		55	55
Bap	*Baptisia australis*	False Blue Indigo	1 gal		3	
C	*Coreopsis grandiflora 'Jethro Tull'*	Tickseed	1 gal		12	
Cal	*Calamagrostis acutifolia 'Karl Foerster'*	Feather Reed Grass	1 gal		32	26
Daf	*Daffodil Mix*					
	Narcissus 'King Alfred'		TOPSIZE		87	62
	Narcissus 'Mount Hood'		TOPSIZE		87	62
	Narcissus Sweet Harmony		TOPSIZE		87	62
Day	*Daylily Mix*					
	Hemerocallis 'Big Time Happy'	Big Time Happy Daylily	1 gal	MIX EVENLY	58	31
	Hemerocallis 'Siloam Double Classic'	Siloam Double Classic Daylily	1 gal		58	31
	Hemerocallis 'Gordon Biggs'	Gordon Biggs Daylily	1 gal		56	30
H1	*Hosta 'Frances Williams'*	Frances Williams Hosta	1 gal		21	6
H2	*Hosta 'Sum and Substance'*	Sum and Substance Hosta	1 gal		14	4
H3	*Hosta sieboldiana 'Elegans'*	Elegans Hosta	1 gal		12	3
Ir	*Iris sibirica 'Ceasar's Brother'*	Dark Pansy Purple Siberian Iris	1 gal		13	0
Lam	*Lamium maculatum 'White nancy'*	White-Leaved Dead Nettle	1 gal		73	73
Mis	*Miscanthus sinensis 'Morning Light'*	Morning Light Maiden Grass	1 gal		5	5
Nep	*Nepeta faassenii x 'Walker's Low'*	Walker's Low Catmint	1 gal		40	24
Per	*Perovskia atriplicifolia 'Filigran'*	Russian Sage	1 gal		67	16
Rud	*Rudbeckia fulgida 'Goldsturm'*	Black-Eyed Susan	1 gal		51	23
Sal	*Salvia 'Carradonna'*	Salvia	1 gal		153	111
Vm	*Vinca minor 'Bowles'*	Bowles Periwinkle	2.5" Pots	SET 8" ON CENTER	3620	625

SHRUBS

Symbol	Botanical Name	Common Name	Size	MINIMUM DIMENSIONS	Comments	QUANTITY TOTAL	L-2
Az1	*Azalea kiusianum 'Best Pink'*	Best Pink Azalea	3 gal	18"WX18"H		5	
Az2	*Azalea kiusianum 'White Form'*	White Form Azalea	3 gal	18"WX18"H		21	
Box	*Buxus microphylla 'Winter Gem'*	Winter Gem Boxwood	3 gal	18"WX18"H		27	
Cl	*Clethra alnifolia 'Hummingbird'*	Hummingbird Compact Summersweet	3 gal	18"WX18"H		28	13
Cor	*Cornus alba 'Ivory Halo'*	Ivory Halo Dogwood	5 gal	24"WX24"H		24	4
CR	*Cornus racemosa*	Grey Dogwood	4-5' Ht		B&B	115	
Enk	*Enkianthus campanulatus*	Redvein Enkianthus	4-5' Ht		B&B	5	
FOR	*Forsythia x intermedia 'Gold Tide'*	Dwarf Forsythia	3 gal	18"WX18"H		79	
Hs	*Hibiscus syriacus 'Blue Satin'*	Blue Satin Rose-of-Sharon	5-6' Ht		B&B	12	2
HyA	*Hydrangea arborescens 'Annabelle'*	Annabelle Hydrangea	5 gal	24"WX24"H		95	12
HyB	*Hydrangea paniculata 'Bobo'*	Bobo Hydrangea	3 gal	18"WX18"H		26	
HyE	*Hydrangea macrophylla 'Endless Summer'*	Endless Summer Hydrangea	3 gal	18"WX18"H		31	
HyL	*Hydrangea paniculata 'Little Lime'*	Little Lime Hydrangea	7 gal			52	23
HyP	*Hydrangea anomela petiolaris*	Climbing Hydrangea	5 gal		STAKED	7	7
HYPG	*Hydrangea paniculata 'Grandiflora'*	P.G. Hydrangea	5-6' Ht		B&B TREEFORM	3	
HyQ	*Hydrangea quercifolia 'Sikes Dwarf'*	Sike's Dwarf Hydrangea	5 gal	24"WX24"H		12	
HyQR	*Hydrangea quercifolia 'Ruby Slippers'*	Ruby Slippers Oakleaf Hydrangea	5 gal	24"WX24"H		4	
Ic	*Ilex crenata 'Green Lustre'*	Green Luster Japanese Holly	3 gal	18"WX18"H		49	14
Ig	*Ilex glabra 'Compacta'*	Inkberry	5 gal	24"WX24"H		42	
It	*Itea virginica 'Little Henry'*	Little Henry Sweetspire	3 gal	18"WX18"H		25	
Jc	*Juniperus chinensis 'Sargenti'*	Sargent Juniper	3 gal	18"WX18"H		47	32
Jsg	*Juniperus chinensis 'Seagreen'*	Seagreen Juniper	2-2.5' Ht		B&B	18	18
KLE	*Kalmia latifolia 'Elf'*	Elf Dwarf Mountain Laurel	5 gal	24"WX24"H		14	
Leu	*Leucothoe fontanesiana 'Compacta'*	Compact Drooping Leucothoe	3 gal	18"WX18"H		108	24
Md	*Microbiota decussata*	Russian Cypress	3 gal	18"WX18"H		28	
Mp	*Myrica pensylvanica*	Northern Bayberry	3-4' Ht		B&B FULL	44	
RhA	*Rhododendron 'Aglo'*	Aglo Rhododendron	2-2.5' Ht		B&B	24	3
RhC	*Rhododendron 'Chionoides'*	Chionoides Rhododendron	2-2.5' Ht		B&B	18	
RhS	*Rhododendron 'Scintillation'*	Scintillation Rhododendron	2.5 - 3' Ht		B&B	15	8
Ra	*Rhus aromatica 'Grow-Low'*	Grow Low Sumac	3 gal	18"WX18"H		145	
ROS1	*Rosa 'DwarfPavement'*	Pink Fragrant Low semi-double Rose	3 gal	18"WX18"H		21	
Ros	*Rosa 'Knockout'*	Double Red Knockout Rose	3 gal	18"WX18"H		68	29
SpA	*Spiraea x bumalda 'Anthony Waterer'*	Anthony Waterer Spirea	3 gal	18"WX18"H		29	
SpG	*Spiraea x 'Goldmound'*	Goldmound Spirea	3 gal	18"WX18"H		12	6
SYB	*Syringa 'Bloomerang'*	Bloomerange Lilac	2.5-3 Ht		B&B	91	
SyP	*Syringa meyeri 'Palibin'*	Dwarf Korean Lilac	3-4 Ht		B&B	31	7
Tax	*Taxus media 'Everlow'*	Everlow Yew	18-24" W		B&B	31	
ThT	*Thuja occidentalis 'Techny'*	Techny Arborvitae	6-7' Ht		B&B	4	4
TmT	*Taxus media 'Tauntoni'*	Taunton Yew	3 gal	18"WX18"H		57	22
VP	*Viburnum prunifolium*	Blackhaw Viburnum	4-5' Ht		B&B	43	
VpT	*Viburnum plicatum tomentosum 'Mariesii'*	Marie's Doublefile Viburnum	4-5' Ht		B&B	1	
VT	*Viburnum trilobum*	American Cranberry Viburnum	4-5' Ht		B&B	60	

Master Plant List

TREES

Symbol	Botanical Name	Common Name	Size	Comments	QUANTITY TOTAL	L-2
Am	*Amelanchier x grandiflora 'Autumn Brilliance'*	Autumn Brilliance Serviceberry	8-10' Ht	B&B, Multi-stem	3	
AR	*Acer rubrum 'October Glory'*	October Glory Red Maple	3-3.5" Cal	B&B, Full	5	
ArK	*Acer rubrum 'Karpick'*	Karpick Red Maple	3-3.5" Cal	B&B, Matched	9	
Bn	*Betula nigra 'Heritage'*	Heritage River Birch	12-14' Ht	B&B, Multi-stem	16	
Cb	*Carpinus betulus 'Frans Fontaine'*	Hornbeam	3-3.5" Cal	B&B	3	
Co	*Crataegus crus-galli 'Inermis'*	Thornless Cockspur Hawthorn	2-2.5" Cal	B&B	1	
Ok	*Cornus kousa*	Kousa Dogwood	8-10' Ht	B&B	2	2
Gt	*Gleditsia triancanthos inermis 'Halka'*	Halka Thornless Honeylocust	3-3.5" Cal	B&B SPECIMEN	6	4
Ham	*Hamamelis x intermedia 'Arnold promise'*	Arnold Promise Witchhazel	5-6' Ht	B&B MULTISTEMMED	1	
LAB	*Laburnum x watereri 'Vossii'*	Golden Chain Tree	2-2.5" Cal	B&B	2	
Mag	*Magnolia stellata*	Star magnolia	8-10' Ht	B&B	1	
Mal	*Malus 'Donald Wyman'*	Donald Wyman Crabapple	2-2.5" Cal	B&B	1	
Ls	*Liquidambar styraciflua*	American Sweetgum	3-3.5" Cal	B&B	3	
Jm	*Juniperus chinensis 'Mountbatten'*	Mountbatten Juniper	7-8' Ht	B&B	7	1
JV	*Juniperus virginiana*	Eastern Red Cedar	7-8' Ht	B&B	12	
Ns	*Nyssa Sylvatica*	Black Tupelo	3-3.5" Cal	B&B	5	
Po	*Picea orientalis*	Oriental Spruce	8-10' Ht	B&B	1	
PoG	*Picea orientalis 'Gowdy'*	Gowdy Oriental Spruce	8-10' Ht	B&B	6	1
PP	*Picea pungens' Glauca'*	Colorado Blue Spruce	8-10' Ht	B&B	7	
PSK	*Prunus serrulata 'Kwanzan'*	Kwanzan Cherry	2-2.5" Cal	B&B	3	
Qb	*Quercus bicolor*	Swamp White Oak	3-3.5" Cal	B&B	2	
THP1	*Thuja plicata 'Green Giant'*	Green Giant Arborvitae	12' Ht	B&B FULL	9	
THP2	*Thuja plicata 'Green Giant'*	Green Giant Arborvitae	14' Ht	B&B FULL	6	
Ua	*Ulmus americana 'Princeton'*	Princeton American Elm	3-3.5" Cal	B&B	9	
Z	*Zelkova serrata 'Green Vase'*	Green Vase Zelkova	3-3.5" Cal	B&B	6	

0 2 5 10 20

woodburn & company
LANDSCAPE ARCHITECTURE
103 Kent Place Newmarket, New Hampshire Phone: 603.659.5949

RiverWoods Durham

MAIN ENTRY LANDSCAPE PLAN

Stone Quarry Drive Durham, New Hampshire

Drawn By:	VM
Checked By:	RW
Scale:	1" = 10' - 0"
Date:	July 19, 2017

Revisions: October 16, 2017
December 1, 2017
January 10, 2018
(50% CD) February 16, 2018
(Permit Set) March 16, 2018
(For Bid) April 2, 2018
100% CD April 13, 2018
Final Town Approval May 23, 2018

L-2

Sheet 2 of 8

© 2018 Woodburn & Company Landscape Architecture, LLC

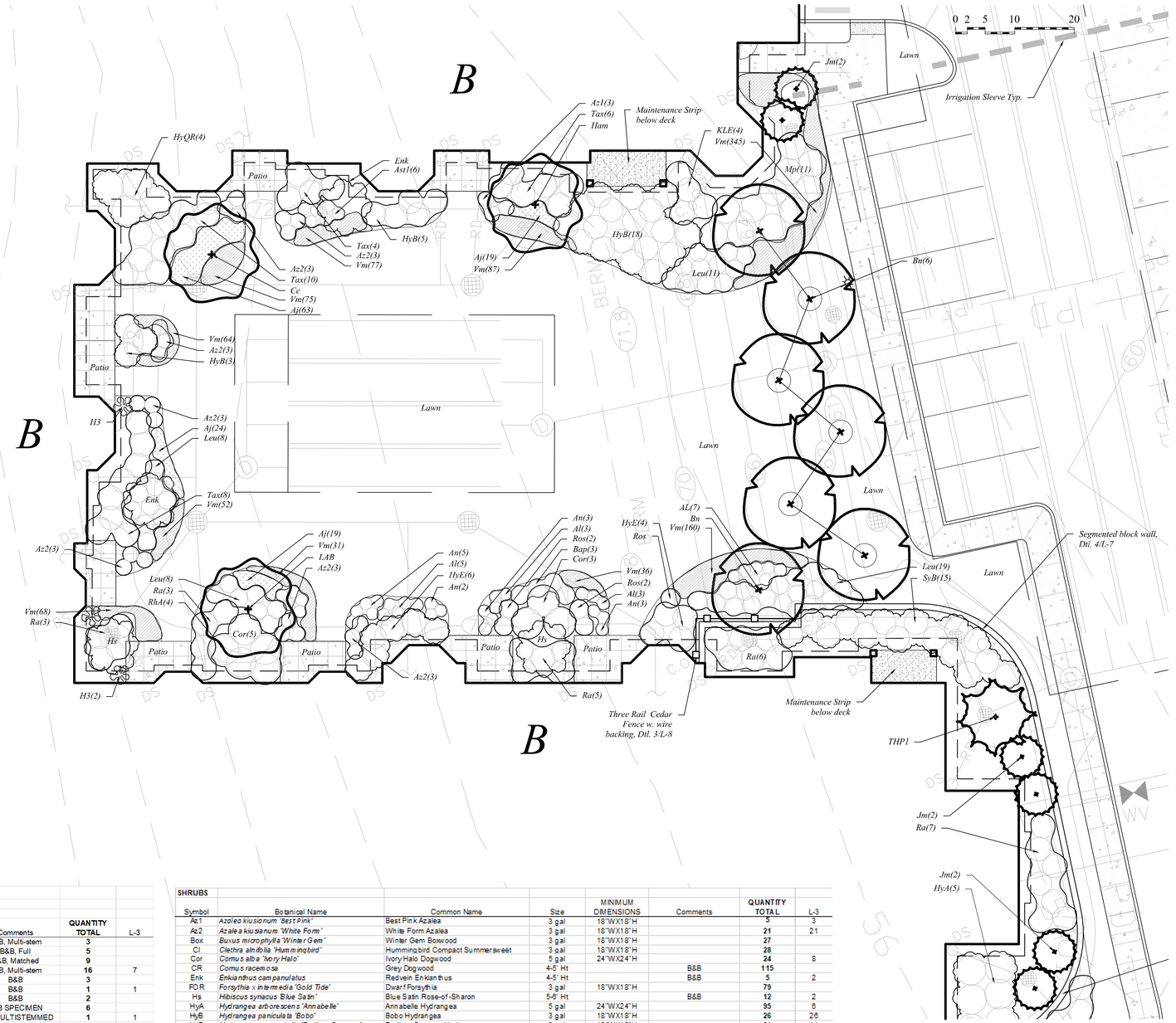

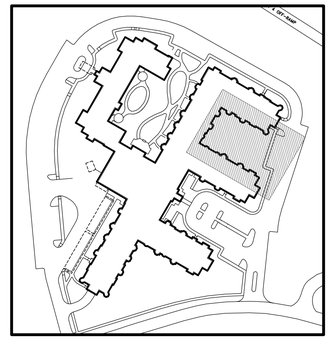

Key Plan

woodburn & company
LANDSCAPE ARCHITECTURE
103 Kent Place Newmarket, New Hampshire Phone: 603.659.5949

RiverWoods Durham

AREA B LANDSCAPE PLAN

Stone Quarry Drive Durham, New Hampshire

Drawn By:	VM
Checked By:	RW
Scale:	1" = 10' - 0"
Date:	July 19, 2017
Revisions:	October 16, 2017
	December 1, 2017
	January 10, 2018
	(50% CD) February 16, 2018
	(Permit Set) March 16, 2018
	(For Bid) April 2, 2018
	100% CD April 13, 2018
	Final Town Approval May 23, 2018

L-3

Sheet 3 of 8

Master Plant List

TREES

Symbol	Botanical Name	Common Name	Size	Comments	QUANTITY TOTAL	L-3
Am	*Amelanchier x grandiflora 'Autumn Brilliance'*	Autumn Brilliance Serviceberry	8-10' Ht	B&B, Multi-stem	3	
AR	*Acer rubrum 'October Glory'*	October Glory Red Maple	3-3.5" Cal	B&B, Full	5	
ArK	*Acer rubrum 'Karpick'*	Karpick Red Maple	3-3.5" Cal	B&B, Matched	9	
Bn	*Betula nigra 'Heritage'*	Heritage River Birch	12-14' Ht	B&B, Multi-stem	16	7
Cb	*Carpinus betulus 'Frans Fontaine'*	Hornbeam	3-3.5" Cal	B&B	3	
Cc	*Crataegus crus-galli 'Inermis'*	Thornless Cockspur Hawthorn	2-2.5" Cal	B&B	1	1
Ck	*Cornus kousa*	Kousa Dogwood	8-10' Ht	B&B	2	
Gt	*Gleditsia triacanthos inermis 'Halka'*	Halka Thornless Honeylocust	3-3.5" Cal	B&B SPECIMEN	6	
Ham	*Hamamelis x intermedia "Arnold promise'*	Arnold Promise Witchhazel	5-6' Ht	B&B MULTISTEMMED	1	1
LAB	*Laburnum x watereri 'Vossii'*	Golden Chain Tree	2-2.5" Cal	B&B	2	1
Mag	*Magnolia stellata*	Star magnolia	8-10' Ht	B&B	1	
Mal	*Malus 'Donald Wyman'*	Donald Wyman Crabapple	2-2.5" Cal	B&B	1	
Ls	*Liquidambar styraciflua*	American Sweetgum	3-3.5" Cal	B&B	3	
Jm	*Juniperus chinensis 'Mountbatten*	Mountbatten Juniper	7-8' Ht	B&B	7	6
JV	*Juniperus virginiana*	Eastern Red Cedar	7-8' Ht	B&B	12	
Ns	*Nyssa Sylvatica*	Black Tupelo	3-3.5" Cal	B&B	5	
Po	*Picea orientalis*	Oriental Spruce	8-10' Ht	B&B	1	
PoG	*Picea orientalis 'Gowdy'*	Gowdy Oriental Spruce	8-10' Ht	B&B	6	
PP	*Picea pungens' Glauca'*	Colorado Blue Spruce	8-10' Ht	B&B	7	
PSK	*Prunus serrulata 'Kwanzan'*	Kwanzan Cherry	2-2.5" Cal	B&B	3	
Qb	*Quercus bicolor*	Swamp White Oak	3-3.5" Cal	B&B	2	
THP1	*Thuja plicata 'Green Giant'*	Green Giant Arborvitae	12' Ht	B&B FULL	9	1
THP2	*Thuja plicata 'Green Giant'*	Green Giant Arborvitae	14' Ht	B&B FULL	6	
Ua	*Ulmus americana 'Princeton'*	Princeton American Elm	3-3.5" Cal	B&B	9	
Z	*Zelkova serrata 'Green Vase'*	Green Vase Zelkova	3-3.5" Cal	B&B	6	

SHRUBS

Symbol	Botanical Name	Common Name	Size	MINIMUM DIMENSIONS	Comments	QUANTITY TOTAL	L-3
Az1	*Azalea kiusianum 'Best Pink'*	Best Pink Azalea	3 gal	18"WX18"H		5	3
Az2	*Azalea kiusianum 'White Form'*	White Form Azalea	3 gal	18"WX18"H		21	21
Box	*Buxus microphylla 'Winter Gem'*	Winter Gem Boxwood	3 gal	18"WX18"H		27	
Cl	*Clethra alnifolia 'Hummingbird'*	Hummingbird Compact Summersweet	3 gal	18"WX18"H		28	
Cor	*Cornus alba 'Ivory Halo'*	Ivory Halo Dogwood	5 gal	24"WX24"H		24	8
CR	*Cornus racemosa*	Grey Dogwood	4-5' Ht		B&B	115	
Enk	*Enkianthus campanulatus*	Redvein Enkianthus	4-5' Ht		B&B	5	2
FOR	*Forsythia x intermedia 'Gold Tide'*	Dwarf Forsythia	3 gal	18"WX18"H		79	
Hs	*Hibiscus syriacus 'Blue Satin'*	Blue Satin Rose-of-Sharon	5-6' Ht		B&B	12	2
HyA	*Hydrangea arborescens 'Annabelle'*	Annabelle Hydrangea	5 gal	24"WX24"H		95	6
HyB	*Hydrangea paniculata 'Bobo'*	Bobo Hydrangea	3 gal	18"WX18"H		26	26
HyE	*Hydrangea macrophylla 'Endless Summer'*	Endless Summer Hydrangea	3 gal	18"WX18"H		31	11
HyL	*Hydrangea paniculata 'Little Lime'*	Little Lime Hydrangea	7 gal			52	
HyP	*Hydrangea anomela petiolaris*	Climbing Hydrangea	5 gal		STAKED	7	
HYPG	*Hydrangea paniculata 'Grandiflora'*	P.G. Hydrangea	5-6' Ht		B&B TREEFORM	3	
HyQ	*Hydrangea quercifolia 'Sikes Dwarf'*	Sike's Dwarf Hydrangea	5 gal	24"WX24"H		12	
HyQR	*Hydrangea quercifolia 'Ruby Slippers'*	Ruby Slippers Oakleaf Hydrangea	5 gal	24"WX24"H		4	4
Ic	*Ilex crenata 'Green Lustre'*	Green Luster Japanese Holly	3 gal	18"WX18"H		49	
Ig	*Ilex glabra 'Compacta'*	Inkberry	5 gal	24"WX24"H		42	
It	*Itea virginica 'Little Henry'*	Little Henry Sweetspire	3 gal	18"WX18"H		25	
Jc	*Juniperus chinensis 'Sargents'*	Sargent Juniper	3 gal	18"WX18"H		47	
Jsg	*Juniperus chinensis 'Seagreen'*	Seagreen Juniper	2-2.5' Ht		B&B	18	
KLE	*Kalmia latifolia 'Elf'*	Elf Dwarf Mountain Laurel	5 gal	24"WX24"H		14	4
Leu	*Leucothoe fontanesiana 'Compacta'*	Compact Drooping Leucothoe	3 gal	18"WX18"H		108	35
Md	*Microbiota decussata*	Russian Cypress	3 gal	18"WX18"H		28	
Mp	*Myrica pensylvanica*	Northern Bayberry	3-4' Ht		B&B FULL	44	11
RhA	*Rhododendron 'Aglo'*	Aglo Rhododendron	2-2.5' Ht		B&B	24	3
RhC	*Rhododendron 'Chionoides'*	Chionoides Rhododendron	2-2.5' Ht		B&B	18	
RhS	*Rhododendron 'Scintillation'*	Scintillation Rhododendron	2.5 - 3' Ht		B&B	15	
Ra	*Rhus aromatica 'Grow-Low'*	Grow Low Sumac	3 gal	18"WX18"H		145	25
ROS1	*Rosa 'Dwarf Pavement'*	Pink Fragrant Low semi-double Rose	3 gal	18"WX18"H		21	
Ros	*Rosa 'Knockout'*	Double Red Knockout Rose	3 gal	18"WX18"H		68	5
SpA	*Spiraea x bumalda 'Anthony Waterer'*	Anthony Waterer Spirea	3 gal	18"WX18"H		29	
SpG	*Spiraea x 'Goldmound'*	Goldmound Spirea	3 gal	18"WX18"H		12	
SYB	*Syringa 'Bloomerang'*	Bloomerange Lilac	2.5-3' Ht		B&B	91	15
SyP	*Syringa meyeri 'Palibin'*	Dwarf Korean Lilac	3-4' Ht		B&B	31	
Tax	*Taxus media 'Everlow'*	Everlow Yew	18-24" W		B&B	31	28
ThT	*Thuja occidentalis 'Techny'*	Techny Arborvitae	6-7' Ht		B&B	4	
TmT	*Taxus media 'Tauntonii'*	Taunton Yew	3 gal	18"WX18"H		57	
VP	*Viburnum prunifolium*	Blackhaw Viburnum	4-5' Ht		B&B	43	
VpT	*Viburnum plicatum tomentosum 'Mariesii'*	Marie's Doublefile Viburnum	4-5' Ht		B&B	1	
VT	*Viburnum trilobum*	American Cranberry Viburnum	4-5' Ht		B&B	60	

PERENNIALS

Symbol	Botanical Name	Common Name	Size	Comments	QUANTITY TOTAL	L-3
AL	*Alchemilla mollis*	Lady's Mantle	1 gal		18	18
Aj	*Ajuga reptans 'Burgandy Glow'*	Burgandy Glow Ajuga	1 gal		163	125
An	*Anemone hupehensis 'September Charm'*	Japanese Anemone	1 gal		55	14
Ast1	*Astilbe chinensis 'Finale'*	Light Pink Astilbe	1 gal		115	6
Ast2	*Astilbe 'Deutschland'*	White Early Astilbe	1 gal		55	
Bap	*Baptisia australis*	False Blue Indigo	1 gal		3	3
C	*Coreopsis grandiflora 'Jethro Tull'*	Tickseed	1 gal		12	
Cal	*Calamagrostis acutifolia 'Karl Foerster'*	Feather Reed Grass	1 gal		32	
Daf	*Daffodil Mix*					
	Narcissus 'King Alfred'		TOPSIZE		87	
	Narcissus 'Mount Hood'		TOPSIZE		87	
	Narcissus Sweet Harmony		TOPSIZE		87	
Day	*Daylily Mix*					
	Hemerocallis 'Big Time Happy'	Big Time Happy Daylily	1 gal	MIX EVENLY	58	
	Hemerocallis 'Siloam Double Classic'	Siloam Double Classic Daylily	1 gal		58	
	Hemerocallis 'Gordon Biggs'	Gordon Biggs Daylily	1 gal		56	
H1	*Hosta 'Frances Williams'*	Frances Williams Hosta	1 gal		21	
H2	*Hosta 'Sum and Substance'*	Sum and Substance Hosta	1 gal		14	
H3	*Hosta sieboldiana 'Elegans'*	Elegans Hosta	1 gal		12	3
Ir	*Iris sibirica 'Ceasar's Brother*	Dark Pansy Purple Siberian Iris	1 gal		13	
Lam	*Lamium maculatum White nancy'*	White-Leaved Dead Nettle	1 gal		73	
Mis	*Miscanthus sinensis 'Morning Light'*	Morning Light Maiden Grass	1 gal		5	
Nep	*Nepeta faassenii x 'Walker's Low'*	Walker's Low Catmint	1 gal		40	
Per	*Perovskia atriplicifolia 'Filigran'*	Russian Sage	1 gal		67	
Rud	*Rudbeckia fulgida 'Goldsturm'*	Black-Eyed Susan	1 gal		51	
Sal	*Salvia 'Carradonna'*	Salvia	1 gal		153	
Vm	*Vinca minor 'Bowles'*	Bowles Periwinkle	2.5" Pots	SET 8" ON CENTER	3620	995

© 2018 Woodburn & Company Landscape Architecture, LLC

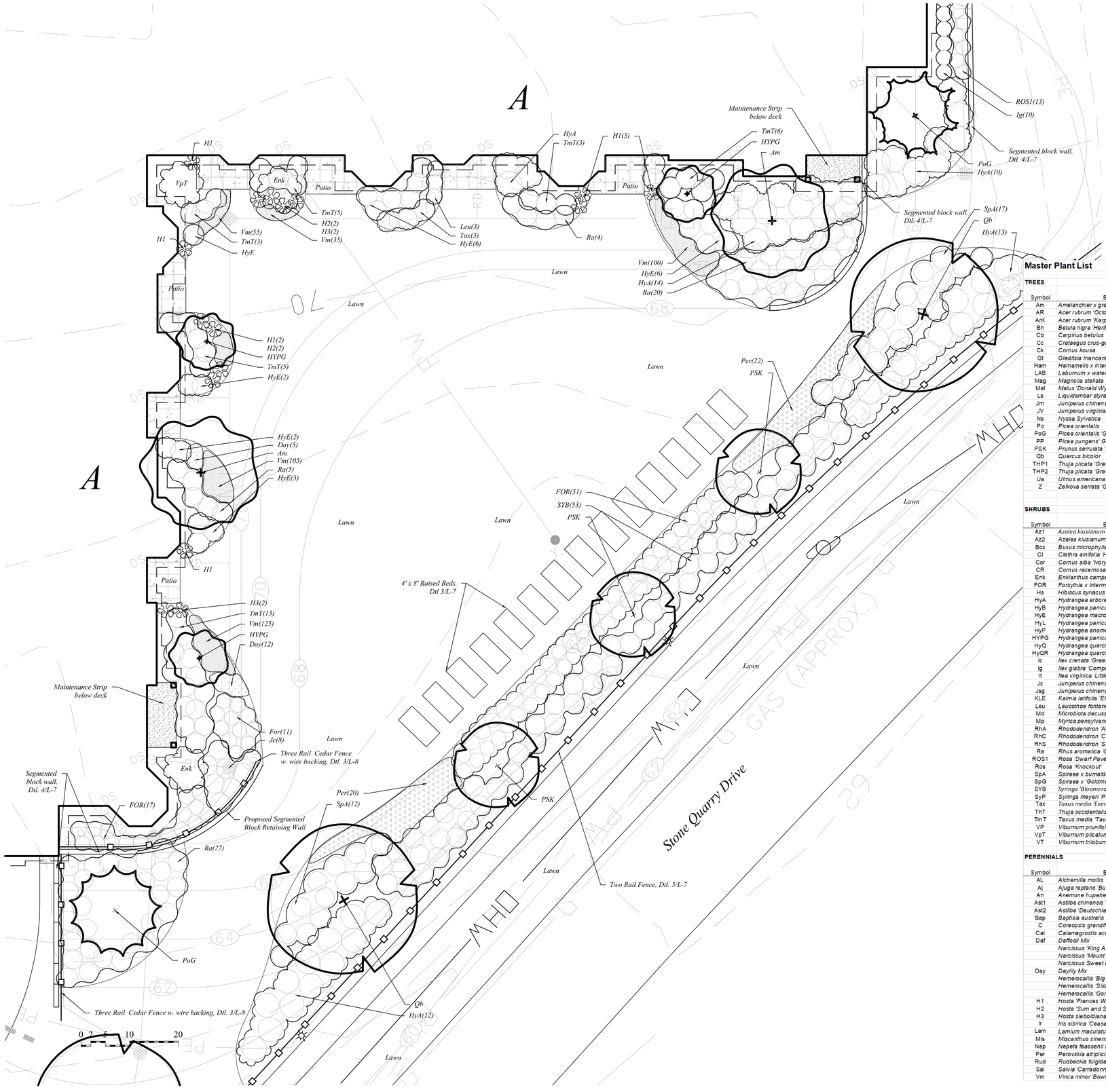

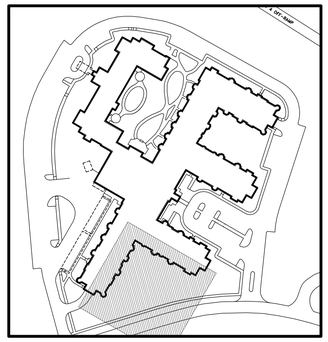

Key Plan

woodburn & company
LANDSCAPE ARCHITECTURE
103 Kent Place Newmarket, New Hampshire Phone: 603.659.5949

RiverWoods Durham

AREA A LANDSCAPE PLAN

Stone Quarry Drive Durham, New Hampshire

Master Plant List

TREES

Symbol	Botanical Name	Common Name	Size	Comments	QUANTITY TOTAL	L-4
Am	*Amelanchier x grandiflora 'Autumn Brilliance'*	Autumn Brilliance Serviceberry	8-10' Ht	B&B, Multi-stem	3	1
AR	*Acer rubrum 'Octobar' Glory'*	October Glory Red Maple	3-3.5" Cal	B&B, Full	5	
ArK	*Acer rubrum 'Karpick'*	Karpick Red Maple	3-3.5" Cal	B&B, Matched	9	
Bn	*Betula nigra 'Heritage'*	Heritage River Birch	12-14' Ht	B&B, Multi-stem	16	
Cb	*Carpinus betulus 'Frans Fontaine'*	Hornbeam	3-3.5" Cal	B&B	3	
Cc	*Crataegus crus-galli 'Inermis'*	Thornless Cockspur Hawthorn	2-2.5" Cal	B&B	1	
Ck	*Cornus kousa*	Kousa Dogwood	8-10' Ht	B&B	2	
Gt	*Gleditsia triacanthos inermis 'Halka'*	Halka Thornless Honeylocust	3-3.5" Cal	B&B SPECIMEN	6	
Ham	*Hamamelis x intermedia "Arnold promise'*	Arnold Promise Witchhazel	5-6' Ht	B&B MULTISTEMMED	1	
LAB	*Laburnum x watereri 'Vossii'*	Golden Chain Tree	2-2.5" Cal	B&B	2	
Mag	*Magnolia stellata*	Star magnolia	8-10' Ht	B&B	1	
Mal	*Malus 'Donald Wyman'*	Donald Wyman Crabapple	2-2.5" Cal	B&B	1	
Ls	*Liquidambar styraciflua*	American Sweetgum	3-3.5" Cal	B&B	3	
Jm	*Juniperus chinensis 'Mountbatten*	Mountbatten Juniper	7-8' Ht	B&B	7	
JV	*Juniperus virginiana*	Eastern Red Cedar	7-8' Ht	B&B	12	
Ns	*Nyssa Sylvatica*	Black Tupelo	3-3.5" Cal	B&B	5	
Po	*Picea orientalis*	Oriental Spruce	8-10' Ht	B&B	1	
PoG	*Picea orientalis 'Gowdy'*	Gowdy Oriental Spruce	8-10' Ht	B&B	6	2
PP	*Picea pungens' Glauca'*	Colorado Blue Spruce	8-10' Ht	B&B	7	
PSK	*Prunus serrulata 'Kwanzan'*	Kwanzan Cherry	2-2.5" Cal	B&B	3	3
Qb	*Quercus bicolor*	Swamp White Oak	3-3.5" Cal	B&B	2	2
THP1	*Thuja plicata 'Green Giant'*	Green Giant Arborvitae	12' Ht	B&B FULL	9	
THP2	*Thuja plicata 'Green Giant'*	Green Giant Arborvitae	14' Ht	B&B FULL	6	
Ua	*Ulmus americana 'Princeton'*	Princeton American Elm	3-3.5" Cal	B&B	9	
Z	*Zelkova serrata 'Green Vase'*	Green Vase Zelkova	3-3.5" Cal	B&B	6	

SHRUBS

Symbol	Botanical Name	Common Name	Size	MINIMUM DIMENSIONS	Comments	QUANTITY TOTAL	L-4
Az1	*Azalea kiusianum 'Best Pink'*	Best Pink Azalea	3 gal	18"WX18"H		5	
Az2	*Azalea kiusianum 'White Form'*	White Form Azalea	3 gal	18"WX18"H		21	
Box	*Buxus microphylla 'Winter Gem'*	Winter Gem Boxwood	3 gal	18"WX18"H		27	
Cl	*Clethra alnifolia 'Hummingbird'*	Hummingbird Compact Summersweet	3 gal	18"WX18"H		28	
Cor	*Cornus alba 'Ivory Halo'*	Ivory Halo Dogwood	5 gal	24"WX24"H		24	
CR	*Cornus racemosa*	Grey Dogwood	4-5' Ht		B&B	115	
Enk	*Enkianthus campanulatus*	Redvein Enkianthus	4-5' Ht		B&B	5	2
FOR	*Forsythia x intermedia 'Gold Tide'*	Dwarf Forsythia	3 gal	18"WX18"H		79	79
Hs	*Hibiscus syriacus 'Blue Satin'*	Blue Satin Rose-of -Sharon	5-6' Ht		B&B	12	
HyA	*Hydrangea arborescens 'Annabelle'*	Annabelle Hydrangea	5 gal	24"WX24"H		95	52
HyB	*Hydrangea paniculata 'Bobo'*	Bobo Hydrangea	3 gal	18"WX18"H		26	
HyE	*Hydrangea macrophylla 'Endless Summer'*	Endless Summer Hydrangea	3 gal	18"WX18"H		31	20
HyL	*Hydrangea paniculata 'Little Lime'*	Little Lime Hydrangea	7 gal			52	
HyP	*Hydrangea anomela petiolaris*	Climbing Hydrangea	5 gal		STAKED	7	
HYPG	*Hydrangea paniculata 'Grandiflora'*	P.G. Hydrangea	5-6' Ht		B&B TREEFORM	3	3
HyQ	*Hydrangea quercifolia 'Sikes Dwarf'*	Sike's Dwarf Hydrangea	5 gal	24"WX24"H		12	
HyQR	*Hydrangea quercifolia 'Ruby Slippers'*	Ruby Slippers Oakleaf Hydrangea	5 gal	24"WX24"H		4	
Ic	*Ilex crenata 'Green Lustre'*	Green Luster Japanese Holly	3 gal	18"WX18"H		49	
Ig	*Ilex glabra 'Compacta'*	Inkberry	5 gal	24"WX24"H		42	10
It	*Itea virginica 'Little Henry'*	Little Henry Sweetspire	3 gal	18"WX18"H		25	
Jc	*Juniperus chinensis 'Sargenti'*	Sargent Juniper	3 gal	18"WX18"H		47	8
Jsg	*Juniperus chinensis 'Seagreen'*	Seagreen Juniper	2-2.5' Ht		B&B	18	
KLE	*Kalmia latifolia 'Elf'*	Elf Dwarf Mountain Laurel	5 gal	24"WX24"H		14	
Leu	*Leucothoe fontanesiana 'Compacta'*	Compact Drooping Leucothoe	3 gal	18"WX18"H		108	3
Md	*Microbiota decussata*	Russian Cypress	3 gal	18"WX18"H		28	
Mp	*Myrica pensylvanica*	Northern Bayberry	3-4' Ht		B&B FULL	44	
RhA	*Rhododendron 'Aglo'*	Aglo Rhododendron	2-2.5' Ht		B&B	24	
RhC	*Rhododendron 'Chlorioides'*	Chlorioides Rhododendron	2-2.5' Ht		B&B	18	
RhS	*Rhododendron 'Scintillation'*	Scintillation Rhododencron	2.5 - 3' Ht		B&B	15	
Ra	*Rhus aromatica 'Grow-Low'*	Grow Low Sumac	3 gal	18"WX18"H		145	56
ROS1	*Rosa 'Dwarf Pavement'*	Pink Fragrant Low semi-double Rose	3 gal	18"WX18"H		21	13
Ros	*Rosa 'Knockout'*	Double Red Knockout Rose	3 gal	18"WX18"H		68	
SpA	*Spiraea x bumalda 'Anthony Waterer'*	Anthony Waterer Spirea	3 gal	18"WX18"H		29	29
SpG	*Spiraea x 'Goldmound'*	Goldmound Spirea	3 gal	18"WX18"H		12	
SYB	*Syringa 'Bloomerang'*	Bloomerange Lilac	2.5-3' Ht		B&B	91	53
SyP	*Syringa meyeri 'Palibin'*	Dwarf Korean Lilac	3-4' Ht		B&B	31	
Tax	*Taxus media 'Everlow'*	Everlow Yew	18-24' W		B&B	31	3
ThT	*Thuja occidentalis 'Techny'*	Techny Arborvitae	6-7' Ht		B&B	4	
Tm T	*Taxus media 'Tauntonii'*	Taunton Yew	3 gal	18"WX18"H		57	35
VP	*Viburnum prunifolium*	Blackhaw Viburnum	4-5' Ht		B&B	43	
VpT	*Viburnum plicatum tomentosum 'Mariesii'*	Marie's Doublefile Viburnum	4-5' Ht		B&B	1	1
VT	*Viburnum trilobum*	American Cranberry Viburnum	4-5' Ht		B&B	60	

PERENNIALS

Symbol	Botanical Name	Common Name	Size	Comments	QUANTITY TOTAL	L-4
AL	*Alchemilla mollis*	Lady's Mantle	1 gal		18	
Aj	*Ajuga reptans 'Burgandy Glow'*	Burgandy Glow Ajuga	1 gal		163	
An	*Anemone hupehensis 'September Charm'*	Japanese Anemone	1 gal		55	
Ast1	*Astilbe chinensis 'Finale'*	Light Pink Astilbe	1 gal		115	
Ast2	*Astilbe 'Deutschland'*	White Early Astilbe	1 gal		55	
Bap	*Baptisia australis*	False Blue Indigo	1 gal		3	
C	*Coreopsis grandiflora 'Jethro Tull'*	Tickseed	1 gal		12	
Cal	*Calamagrostis acutifolia 'Karl Foerster'*	Feather Reed Grass	1 gal		32	
Daf	*Daffodil Mix*					
	Narcissus 'King Alfred'		TOPSIZE		87	
	Narcissus 'Mount Hood'		TOPSIZE		87	
	Narcissus Sweet Harmony		TOPSIZE		87	
Day	*Daylily Mix*					
	Hemerocallis 'Big Time Happy'	Big Time Happy Daylily	1 gal	MIX EVENLY	58	6
	Hemerocallis 'Siloam Double Classic'	Siloam Double Classic Daylily	1 gal		58	6
	Hemerocallis 'Gordon Biggs'	Gordon Biggs Daylily	1 gal		56	5
H1	*Hosta 'Frances Williams'*	Frances Williams Hosta	1 gal		21	8
H2	*Hosta 'Sum and Substance'*	Sum and Substance Hosta	1 gal		14	4
H3	*Hosta sieboldiana 'Elegans'*	Elegans Hosta	1 gal		12	4
Ir	*Iris sibirica 'Ceasar's Brother*	Dark Pansy Purple Siberian Iris	1 gal		13	
Lam	*Lamium maculatum 'White nancy'*	White-Leaved Dead Nettle	1 gal		73	
Mis	*Miscanthus sinensis 'Morning Light'*	Morning Light Maiden Grass	1 gal		5	
Nep	*Nepeta faassenii x 'Walker's Low'*	Walker's Low Catmint	1 gal		40	
Per	*Perovskia atriplicifolia 'Filigran'*	Russian Sage	1 gal		67	42
Rud	*Rudbeckia fulgida 'Goldsturm'*	Black-Eyed Susan	1 gal		51	
Sal	*Salvia 'Carradonna'*	Salvia	1 gal		153	
Vm	*Vinca minor 'Bowles'*	Bowles Periwinkle	2.5" Pots	SET 8" ON CENTER	3620	495

Drawn By:	VM
Checked By:	RW
Scale:	1" = 10' - 0"
Date:	July 19, 2017
Revisions:	October 16, 2017
	December 1, 2017
	January 10, 2018
	(50% CD) February 16, 2018
	(Permit Set) March 16, 2018
	(For Bid) April 2, 2018
	100% CD April 13, 2018
	Final Town Approval May 23, 2018

L-4

Sheet 4 of 8

© 2018 Woodburn & Company Landscape Architecture, LLC

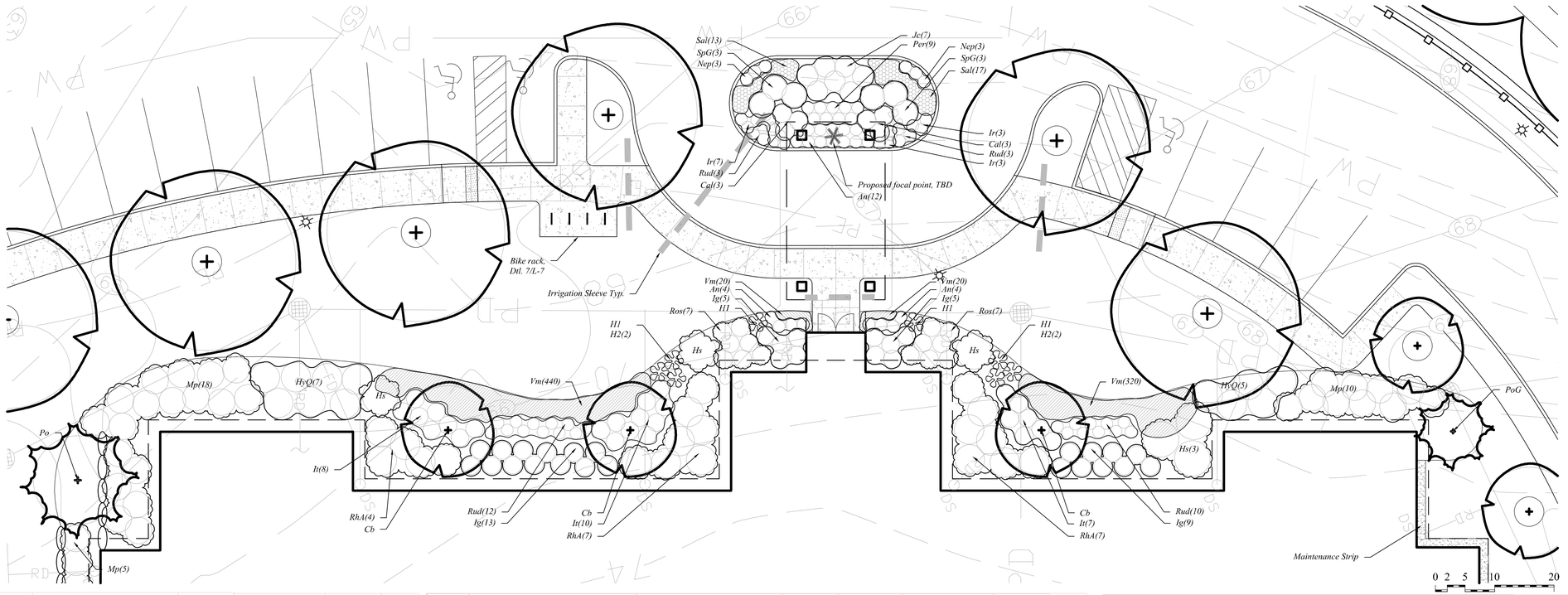

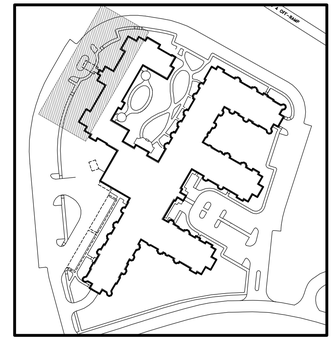

Key Plan

woodburn & company
LANDSCAPE ARCHITECTURE
103 Kent Place Newmarket, New Hampshire Phone: 603.659.5949

RiverWoods Durham

AREA D ENTRY LANDSCAPE PLAN

Stone Quarry Drive Durham, New Hampshire

Master Plant List

TREES

Symbol	Botanical Name	Common Name	Size	Comments	QUANTITY TOTAL	L-5	
Am	*Amelanchier x grandiflora 'Autumn Brilliance'*	Autumn Brilliance Serviceberry	8-10' Ht	B&B, Multi-stem	3		
AR	*Acer rubrum 'October Glory'*	October Glory Red Maple	3-3.5" Cal	B&B, Full	5		
ArK	*Acer rubrum 'Karpick'*	Karpick Red Maple	3-3.5" Cal	B&B, Matched	9		
Bn	*Betula nigra 'Heritage'*	Heritage River Birch	12-14' Ht	B&B, Multi-stem	16		
Cb	*Carpinus betulus 'Frans Fontaine'*	Hornbeam	3-3.5" Cal	B&B	3	3	
Cc	*Crataegus crus-galli 'Inermis'*	Thornless Cockspur Hawthorn	2-2.5" Cal	B&B	1		
Ck	*Cornus kousa*	Kousa Dogwood	8-10' Ht	B&B	2		
Gt	*Gleditsia triancanthos inermis 'Halka'*	Halka Thornless Honeylocust	3-3.5" Cal	B&B SPECIMEN	6		
Ham	*Hamamelis x intermedia "Arnold promise'*	Arnold Promise Witchhazel	5-6' Ht	B&B MULTISTEMMED	1		
LAB	*Laburnum x watereri 'Vossii'*	Golden Chain Tree	2-2.5" Cal	B&B	2		
Mag	*Magnolia stellata*	Star magnolia	8-10' Ht	B&B	1		
Mal	*Malus 'Donald Wyman'*	Donald Wyman Crabapple	2-2.5" Cal	B&B	1		
Ls	*Liquidambar styraciflua*	American Sweetgum	3-3.5" Cal	B&B	3		
Jm	*Juniperus chinensis 'Mountbatten*	Mountbatten Juniper	7-8' Ht	B&B	7		
JV	*Juniperus virginiana*	Eastern Red Cedar	7-8' Ht	B&B	12		
Ns	*Nyssa Sylvatica*	Black Tupelo	3-3.5" Cal	B&B	5		
Po	*Picea orientalis*	Oriental Spruce	8-10' Ht	B&B	1	1	
PoG	*Picea orientalis 'Gowdy'*	Gowdy Oriental Spruce	8-10' Ht	B&B	6	1	
PP	*Picea pungens' Glauca'*	Colorado Blue Spruce	8-10' Ht	B&B	7		
PSK	*Prunus serrulata 'Kwanzan'*	Kwanzan Cherry	2-2.5" Cal	B&B	3		
Qb	*Quercus bicolor*	Swamp White Oak	3-3.5" Cal	B&B	2		
THP1	*Thuja plicata 'Green Giant'*	Green Giant Arborvitae	12' Ht	B&B FULL	9		
THP2	*Thuja plicata 'Green Giant'*	Green Giant Arborvitae	14' Ht	B&B FULL	6		
Ua	*Ulmus americana 'Princeton'*	Princeton American Elm	3-3.5" Cal	B&B	9		
Z	*Zelkova serrata 'Green Vase'*	Green Vase Zelkova	3-3.5" Cal	B&B	6	0	

SHRUBS

Symbol	Botanical Name	Common Name	Size	MINIMUM DIMENSIONS	Comments	QUANTITY TOTAL	L-5
Az1	*Azalea kiusianum 'Best Pink'*	Best Pink Azalea	3 gal	18"WX18"H		5	
Az2	*Azalea kiusianum 'White Form'*	White Form Azalea	3 gal	18"WX18"H		21	
Box	*Buxus microphylla 'Winter Gem'*	Winter Gem Boxwood	3 gal	18"WX18"H		27	
Cl	*Clethra alnifolia 'Hummingbird'*	Hummingbird Compact Summersweet	3 gal	18"WX18"H		28	
Cor	*Cornus alba 'Ivory Halo'*	Ivory Halo Dogwood	5 gal	24"WX24"H		24	
CR	*Cornus racemosa*	Grey Dogwood	4-5' Ht		B&B	115	
Enk	*Enkianthus campanulatus*	Redvein Enkianthus	4-5' Ht		B&B	5	
FOR	*Forsythia x intermedia 'Gold Tide'*	Dwarf Forsythia	3 gal	18"WX18"H		79	
Hs	*Hibiscus syriacus 'Blue Satin'*	Blue Satin Rose-of -Sharon	5-6' Ht		B&B	12	6
HyA	*Hydrangea arborescens 'Annabelle'*	Annabelle Hydrangea	5 gal	24"WX24"H		95	
HyB	*Hydrangea paniculata 'Bobo'*	Bobo Hydrangea	3 gal	18"WX18"H		26	
HyE	*Hydrangea macrophylla 'Endless Summer'*	Endless Summer Hydrangea	3 gal	18"WX18"H		31	
HyL	*Hydrangea paniculata 'Little Lime'*	Little Lime Hydrangea	7 gal			52	
HyP	*Hydrangea anomela petiolaris*	Climbing Hydrangea	5 gal		STAKED	7	
HYPG	*Hydrangea paniculata 'Grandiflora'*	P.G. Hydrangea	5-6' Ht		B&B TREEFORM	3	
HyQ	*Hydrangea quercifolia 'Sikes Dwarf'*	Sike's Dwarf Hydrangea	5 gal	24"WX24"H		12	12
HyQR	*Hydrangea quercifolia 'Ruby Slippers'*	Ruby Slippers Oakleaf Hydrangea	5 gal	24"WX24"H		4	
Ic	*Ilex crenata 'Green Lustre'*	Green Luster Japanese Holly	3 gal	18"WX18"H		49	
Ig	*Ilex glabra 'Compacta'*	Inkberry	5 gal	24"WX24"H		42	32
It	*Itea virginica 'Little Henry'*	Little Henry Sweetspire	3 gal	18"WX18"H		25	25
Jc	*Juniperus chinensis 'Sargenti'*	Sargent Juniper	3 gal	18"WX18"H		47	7
Jsg	*Juniperus chinensis 'Seagreen'*	Seagreen Juniper	2-2.5' Ht		B&B	18	
KLE	*Kalmia latifolia 'Elf'*	Elf Dwarf Mountain Laurel	5 gal	24"WX24"H		14	
Leu	*Leucothoe fontanesiana 'Compacta'*	Compact Drooping Leucothoe	3 gal	18"WX18"H		108	
Md	*Microbiota decussata*	Russian Cypress	3 gal	18"WX18"H		28	
Mp	*Myrica pensylvanica*	Northern Bayberry	3-4' Ht		B&B FULL	44	33
RhA	*Rhododendron 'Aglo'*	Aglo Rhododendron	2-2.5' Ht		B&B	24	18
RhC	*Rhododendron 'Chionoides'*	Chionoides Rhododendron	2-2.5' Ht		B&B	18	
RhS	*Rhododendron 'Scintillation'*	Scintillation Rhododendron	2.5 - 3' Ht		B&B	15	
Ra	*Rhus aromatica 'Grow-Low'*	Grow Low Sumac	3 gal	18"WX18"H		145	
ROS1	*Rosa 'Dwarf Pavement'*	Pink Fragrant Low semi-double Rose	3 gal	18"WX18"H		21	
Ros	*Rosa 'Knockout'*	Double Red Knockout Rose	3 gal	18"WX18"H		68	14
SpA	*Spiraea x bumalda 'Anthony Waterer'*	Anthony Waterer Spirea	3 gal	18"WX18"H		29	
SpG	*Spiraea x 'Goldmound'*	Goldmound Spirea	3 gal	18"WX18"H		12	6
SYB	*Syringa 'Bloomerang'*	Bloomerange Lilac	2.5-3' Ht		B&B	91	
SyP	*Syringa meyeri 'Palibin'*	Dwarf Korean Lilac	3-4' Ht		B&B	31	
Tax	*Taxus media 'Everlow'*	Everlow Yew	18-24' W		B&B	31	
ThT	*Thuja occidentalis 'Techny'*	Techny Arborvitae	6-7' Ht		B&B	4	
TmT	*Taxus media 'Tauntonii'*	Taunton Yew	3 gal	18"WX18"H		57	
VP	*Viburnum prunifolium*	Blackhaw Viburnum	4-5' Ht		B&B	43	
VpT	*Viburnum plicatum tomentosum 'Mariesii'*	Marie's Doublefile Viburnum	4-5' Ht		B&B	1	
VT	*Viburnum trilobum*	American Cranberry Viburnum	4-5' Ht		B&B	60	

PERENNIALS

Symbol	Botanical Name	Common Name	Size	Comments	QUANTITY TOTAL	L-5
AL	*Alchemilla mollis*	Lady's Mantle	1 gal		18	
Aj	*Ajuga reptans 'Burgandy Glow'*	Burgandy Glow Ajuga	1 gal		163	
An	*Anemone hupehensis 'September Charm'*	Japanese Anemone	1 gal		55	20
Ast1	*Astilbe chinensis 'Finale'*	Light Pink Astilbe	1 gal		115	
Ast2	*Astilbe 'Deutschland'*	White Early Astilbe	1 gal		55	
Bap	*Baptisia australis*	False Blue Indigo	1 gal		3	
C	*Coreopsis grandiflora 'Jethro Tull'*	Tickseed	1 gal		12	
Cal	*Calamagrostis acutifolia 'Karl Foerster'*	Feather Reed Grass	1 gal		32	6
Daf	*Daffodil Mix*					
	Narcissus 'King Alfred'		TOPSIZE		87	
	Narcissus 'Mount Hood'		TOPSIZE		87	
	Narcissus Sweet Harmony		TOPSIZE		87	
Day	*Daylily Mix*					
	Hemerocallis 'Big Time Happy'	Big Time Happy Daylily	1 gal	MIX EVENLY	58	
	Hemerocallis 'Siloam Double Classic'	Siloam Double Classic Daylily	1 gal		58	
	Hemerocallis 'Gordon Biggs'	Gordon Biggs Daylily	1 gal		56	
H1	*Hosta 'Frances Williams'*	Frances Williams Hosta	1 gal		21	4
H2	*Hosta 'Sum and Substance'*	Sum and Substance Hosta	1 gal		14	4
H3	*Hosta sieboldiana 'Elegans'*	Elegans Hosta	1 gal		12	
Ir	*Iris sibirica 'Ceasar's Brother'*	Dark Pansy Purple Siberian Iris	1 gal		13	13
Lam	*Lamium maculatum 'White nancy'*	White-Leaved Dead Nettle	1 gal		73	
Mis	*Miscanthus sinensis 'Morning Light'*	Morning Light Maiden Grass	1 gal		5	
Nep	*Nepeta faassenii x 'Walker's Low'*	Walker's Low Catmint	1 gal		40	6
Per	*Perovskia atriplicifolia 'Filigran'*	Russian Sage	1 gal		67	9
Rud	*Rudbeckia fulgida 'Goldsturm'*	Black-Eyed Susan	1 gal		51	28
Sal	*Salvia 'Carradonna'*	Salvia	1 gal		153	30
Vm	*Vinca minor 'Bowles'*	Bowles Periwinkle	2.5" Pots	SET 8" ON CENTER	3620	800

Drawn By:	VM
Checked By:	RW
Scale:	1" = 10' - 0"
Date:	July 19, 2017
Revisions:	October 16, 2017
	December 1, 2017
	January 10, 2018
	(50% CD) February 16, 2018
	(Permit Set) March 16, 2018
	(For Bid) April 2, 2018
	100% CD April 13, 2018
	Final Town Approval May 23, 2018

L-5

Sheet 5 of 8

© 2018 Woodburn & Company Landscape Architecture, LLC

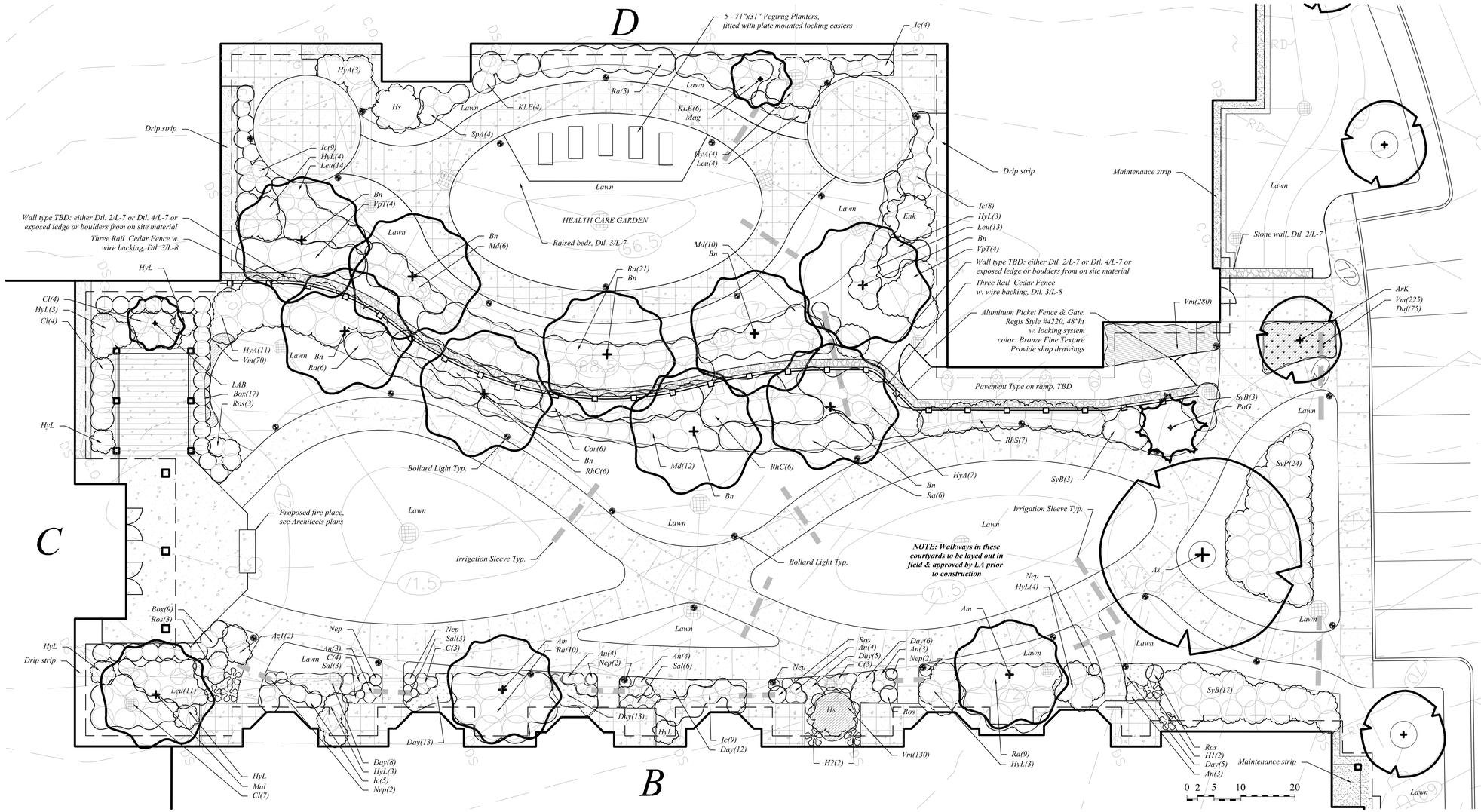

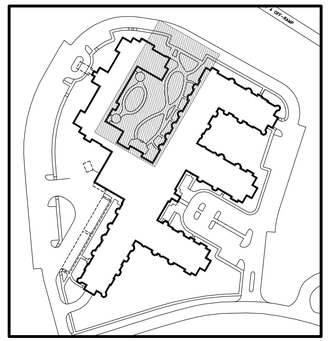

Key Plan

woodburn & company
LANDSCAPE ARCHITECTURE
103 Kent Place Newmarket, New Hampshire Phone: 603.659.5949

RiverWoods Durham

AREA C & HEALTH CARE GARDEN LANDSCAPE PLAN

Stone Quarry Drive Durham, New Hampshire

Master Plant List

TREES

Symbol	Botanical Name	Common Name	Size	Comments	QUANTITY TOTAL	L-6
Am	*Amelanchier x grandiflora 'Autumn Brilliance'*	Autumn Brilliance Serviceberry	8-10' Ht	B&B, Multi-stem	3	2
AR	*Acer rubrum 'October Glory'*	October Glory Red Maple	3-3.5" Cal	B&B, Full	5	
ArK	*Acer rubrum 'Karpick'*	Karpick Red Maple	3-3.5" Cal	B&B, Matched	9	1
Bn	*Betula nigra 'Heritage'*	Heritage River Birch	12-14' Ht	B&B, Multi-stem	16	9
Cb	*Carpinus betulus 'Frans Fontaine'*	Hornbeam	3-3.5" Cal	B&B	3	
Cc	*Crataegus crus-galli 'inermis'*	Thornless Cockspur Hawthorn	2-2.5" Cal	B&B	1	
Ck	*Cornus kousa*	Kousa Dogwood	8-10' Ht	B&B	2	
Gt	*Gleditsia triacanthos inermis 'Halka'*	Halka Thornless Honeylocust	3-3.5" Cal	B&B SPECIMEN	6	
Ham	*Hamamelis x intermedia "Arnold promise'*	Arnold Promise Witchhazel	5-6' Ht	B&B MULTISTEMMED	1	
LAB	*Laburnum x watereri 'Vossii'*	Golden Chain Tree	2-2.5" Cal	B&B	2	1
Mag	*Magnolia stellata*	Star magnolia	8-10' Ht	B&B	1	1
Mal	*Malus 'Donald Wyman'*	Donald Wyman Crabapple	2-2.5" Cal	B&B	1	1
Ls	*Liquidambar styraciflua*	American Sweetgum	3-3.5" Cal	B&B	3	
Jm	*Juniperus chinensis 'Mountbatten*	Mountbatten Juniper	7-8' Ht	B&B	7	
JV	*Juniperus virginiana*	Eastern Red Cedar	7-8' Ht	B&B	12	
Ns	*Nyssa Sylvatica*	Black Tupelo	3-3.5" Cal	B&B	5	
Po	*Picea orientalis*	Oriental Spruce	8-10' Ht	B&B	1	
PoG	*Picea orientalis 'Gowdy'*	Gowdy Oriental Spruce	8-10' Ht	B&B	6	1
PP	*Picea pungens' Glauca'*	Colorado Blue Spruce	8-10' Ht	B&B	7	
PSK	*Prunus serrulata 'Kwanzan'*	Kwanzan Cherry	2-2.5" Cal	B&B	3	
Qb	*Quercus bicolor*	Swamp White Oak	3-3.5" Cal	B&B	2	
THP1	*Thuja plicata 'Green Giant'*	Green Giant Arborvitae	12' Ht	B&B FULL	9	
THP2	*Thuja plicata 'Green Giant'*	Green Giant Arborvitae	14' Ht	B&B FULL	6	
Ua	*Ulmus americana 'Princeton'*	Princeton American Elm	3-3.5" Cal	B&B	9	
Z	*Zelkova serrata 'Green Vase'*	Green Vase Zelkova	3-3.5" Cal	B&B	6	

SHRUBS

Symbol	Botanical Name	Common Name	Size	MINIMUM DIMENSIONS	Comments	QUANTITY TOTAL	L-6
Az1	*Azalea kiusianum 'Best Pink'*	Best Pink Azalea	3 gal	18"WX18"H		5	2
Az2	*Azalea kiusianum 'White Form'*	White Form Azalea	3 gal	18"WX18"H		21	
Box	*Buxus microphylla 'Winter Gem'*	Winter Gem Boxwood	3 gal	18"WX18"H		27	27
Cl	*Clethra alnifolia 'Hummingbird'*	Hummingbird Compact Summersweet	3 gal	18"WX18"H		28	15
Cor	*Cornus alba 'Ivory Halo'*	Ivory Halo Dogwood	5 gal	24"WX24"H		24	12
CR	*Cornus racemosa*	Grey Dogwood	4-5' Ht		B&B	115	
Enk	*Enkianthus campanulatus*	Redvein Enkianthus	4-5' Ht		B&B	5	1
FOR	*Forsythia x intermedia 'Gold Tide'*	Dwarf Forsythia	3 gal	18"WX18"H		79	
Hs	*Hibiscus syriacus 'Blue Satin'*	Blue Satin Rose-of -Sharon	5-6' Ht		B&B	12	2
HyA	*Hydrangea arborescens 'Annabelle'*	Annabelle Hydrangea	5 gal	24"WX24"H		95	25
HyB	*Hydrangea paniculata 'Bobo'*	Bobo Hydrangea	3 gal	18"WX18"H		26	
HyE	*Hydrangea macrophylla 'Endless Summer'*	Endless Summer Hydrangea	3 gal	18"WX18"H		31	
HyL	*Hydrangea paniculata 'Little Lime'*	Little Lime Hydrangea	7 gal			52	29
HyP	*Hydrangea anomela petiolaris*	Climbing Hydrangea	5 gal		STAKED	7	
HYPG	*Hydrangea paniculata 'Grandiflora'*	P.G. Hydrangea	5-6' Ht		B&B TREEFORM	3	
HyQ	*Hydrangea quercifolia 'Sikes Dwarf'*	Sike's Dwarf Hydrangea	5 gal	24"WX24"H		12	
HyQR	*Hydrangea quercifolia 'Ruby Slippers'*	Ruby Slippers Oakleaf Hydrangea	5 gal	24"WX24"H		4	
Ic	*Ilex crenata 'Green Lustre'*	Green Luster Japanese Holly	3 gal	18"WX18"H		49	35
Ig	*Ilex glabra 'Compacta'*	Inkberry	3 gal	24"WX24"H		42	
It	*Itea virginica 'Little Henry'*	Little Henry Sweetspire	3 gal	18"WX18"H		25	
Jc	*Juniperus chinensis 'Sargenti'*	Sargent Juniper	3 gal	18"WX18"H		47	
Jsg	*Juniperus chinensis 'Seagreen'*	Seagreen Juniper	2-2.5' Ht		B&B	18	
KLE	*Kalmia latifolia 'Elf'*	Elf Dwarf Mountain Laurel	5 gal	24"WX24"H		14	10
Leu	*Leucothoe fontanesiana 'Compacta'*	Compact Drooping Leucothoe	3 gal	18"WX18"H		108	46
Md	*Microbiota decussata*	Russian Cypress	3 gal	18"WX18"H		28	28
Mp	*Myrica pensylvanica*	Northern Bayberry	3-4' Ht		B&B FULL	44	
RhA	*Rhododendron 'Aglo'*	Aglo Rhododendron	2-2.5' Ht		B&B	24	
RhC	*Rhododendron 'Chionoides'*	Chionoides Rhododendron	2-2.5' Ht		B&B	18	18
RhS	*Rhododendron 'Scintillation'*	Scintillation Rhododendron	2.5 - 3' Ht		B&B	15	7
Ra	*Rhus aromatica 'Grow-Low'*	Grow Low Sumac	3 gal	18"WX18"H		145	51
ROS1	*Rosa 'Dwarf Pavement'*	Pink Fragrant Low semi-double Rose	3 gal	18"WX18"H		21	8
Ros	*Rosa 'Knockout'*	Double Red Knockout Rose	3 gal	18"WX18"H		68	20
SpA	*Spiraea x bumalda 'Anthony Waterer'*	Anthony Waterer Spirea	3 gal	18"WX18"H		29	
SpG	*Spiraea x 'Goldmound'*	Goldmound Spirea	3 gal	18"WX18"H		12	
SYB	*Syringa 'Bloomerang'*	Bloomerange Lilac	2.5-3' Ht		B&B	91	23
SyP	*Syringa meyeri 'Palibin'*	Dwarf Korean Lilac	3-4' Ht		B&B	31	24
Tax	*Taxus media 'Everlow'*	Everlow Yew	18-24' W		B&B	31	
ThT	*Thuja occidentalis 'Techny'*	Techny Arborvitae	6-7' Ht		B&B	4	
TmT	*Taxus media 'Tauntonii'*	Taunton Yew	3 gal	18"WX18"H		57	
VP	*Viburnum prunifolium*	Blackhaw Viburnum	4-5' Ht		B&B	43	8
VpT	*Viburnum plicatum tomentosum 'Mariesii'*	Marie's Doublefile Viburnum	4-5' Ht		B&B	1	
VT	*Viburnum trilobum*	American Cranberry Viburnum	4-5' Ht		B&B	60	

PERENNIALS

Symbol	Botanical Name	Common Name	Size	Comments	QUANTITY TOTAL	L-6
AL	*Alchemilla mollis*	Lady's Mantle	1 gal		18	
Aj	*Ajuga reptans 'Burgandy Glow'*	Burgandy Glow Ajuga	1 gal		163	
An	*Anemone hupehensis 'September Charm'*	Japanese Anemone	1 gal		56	21
Ast1	*Astilbe chinensis 'Finale'*	Light Pink Astilbe	1 gal		115	
Ast2	*Astilbe 'Deutschland'*	White Early Astilbe	1 gal		55	
Bap	*Baptisia australis*	False Blue Indigo	1 gal		3	
C	*Coreopsis grandiflora 'Jethro Tull'*	Tickseed	1 gal		12	12
Cal	*Calamagrostis acutifolia 'Karl Foerster'*	Feather Reed Grass	1 gal		32	
Daf	*Daffodil Mix*					
	Narcissus 'King Alfred'		TOPSIZE		87	25
	Narcissus 'Mount Hood'		TOPSIZE		87	25
	Narcissus Sweet Harmony		TOPSIZE		87	25
Day	*Daylily Mix*					
	Hemerocallis 'Big Time Happy'	Big Time Happy Daylily	1 gal	MIX EVENLY	58	21
	Hemerocallis 'Siloam Double Classic'	Siloam Double Classic Daylily	1 gal		58	21
	Hemerocallis 'Gordon Bloga'	Gordon Bloga Daylily	1 gal		56	21
H1	*Hosta 'Frances Williams'*	Frances Williams Hosta	1 gal		21	3
H2	*Hosta 'Sum and Substance'*	Sum and Substance Hosta	1 gal		14	2
H3	*Hosta sieboldiana 'Elegans'*	Elegans Hosta	1 gal		12	2
Ir	*Iris sibirica 'Ceasar's Brother'*	Dark Pansy Purple Siberian Iris	1 gal		13	
Lam	*Lamium maculatum 'White nancy'*	White-Leaved Dead Nettle	1 gal		73	
Mis	*Miscanthus sinensis 'Morning Light'*	Morning Light Maiden Grass	1 gal		5	
Nep	*Nepeta faassenii x 'Walker's Low'*	Walker's Low Catmint	1 gal		40	10
Per	*Perovskia atriplicifolia 'Filigran'*	Russian Sage	1 gal		67	
Rud	*Rudbeckia fulgida 'Goldstum'*	Black-Eyed Susan	1 gal		51	
Sal	*Salvia 'Carradonna'*	Salvia	1 gal		153	12
Vm	*Vinca minor 'Bowles'*	Bowles Periwinkle	2.5" Pots	SET 8" ON CENTER	3620	705

Drawn By:	VM
Checked By:	RW
Scale:	1" = 10' - 0"
Date:	July 19, 2017
Revisions:	October 16, 2017
	December 1, 2017
	January 10, 2018
	(50% CD) February 16, 2018
	(Permit Set) March 16, 2018
	(For Bid) April 2, 2018
	100% CD April 13, 2018
	Final Town Approval May 23, 2018

L-6

Sheet 6 of 8

© 2018 Woodburn & Company Landscape Architecture, LLC

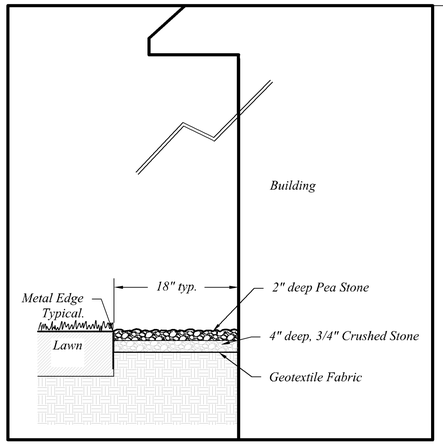

1 MAINTENANCE STRIP
Scale: ½"=1'-0"

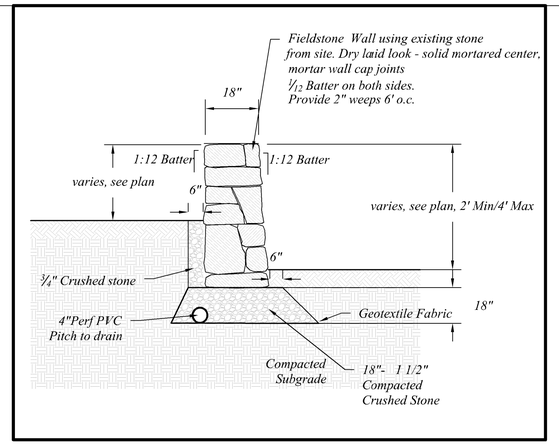

2 STONE RETAINING WALL SECTION
Scale: ½"=1'-0"

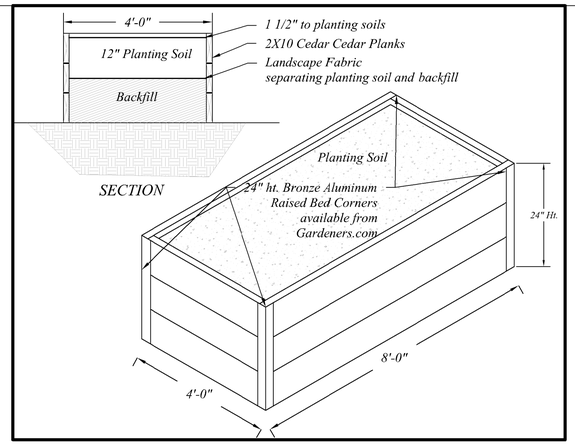

3 RAISED PLANTING BEDS
Scale: ½"=1'-0"

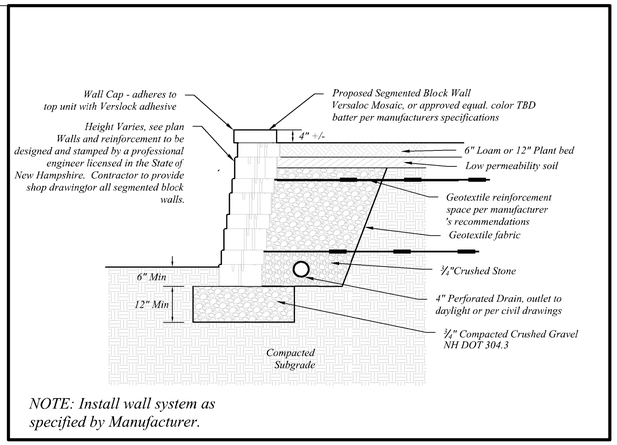

NOTE: Install wall system as specified by Manufacturer.

4 SEGMENTED BLOCK WALL-SINGLE SIDED
Scale: ½"=1'-0"

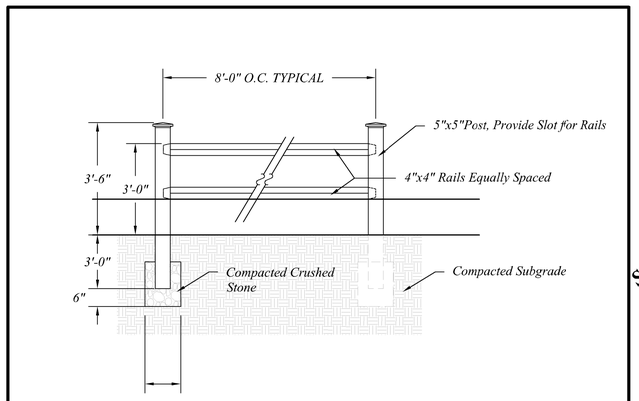

5 2 RAIL DIAMOND RAIL CEDAR FENCE
Scale: ½"=1'-0"

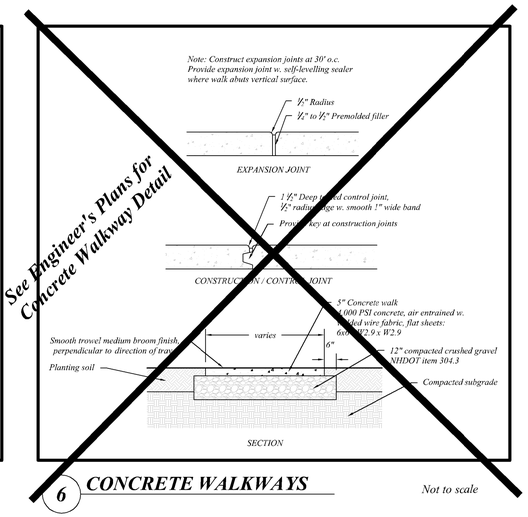

6 CONCRETE WALKWAYS
Not to scale

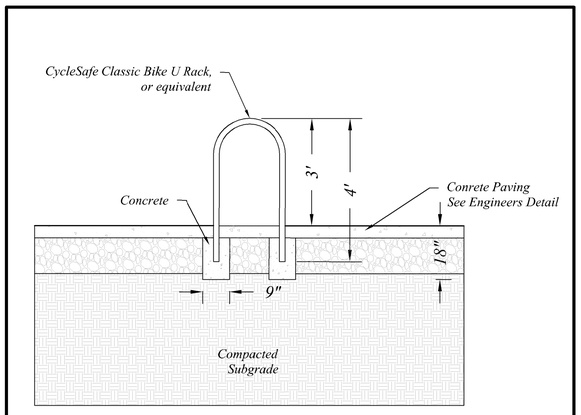

7 BIKE RACK
Scale: ½"=1'-0"

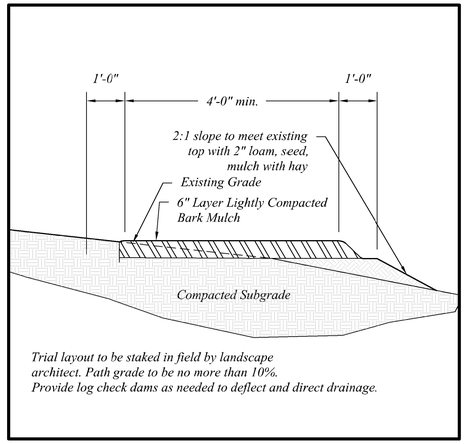

Trial layout to be staked in field by landscape architect. Path grade to be no more than 10%. Provide log check dams as needed to deflect and direct drainage.

8 WOODLAND PATH
Scale: ½"=1'-0"

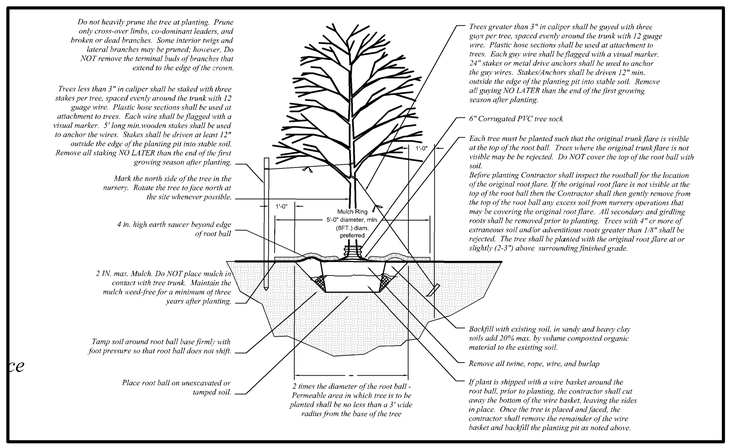

9 TREE PLANTING
NTS

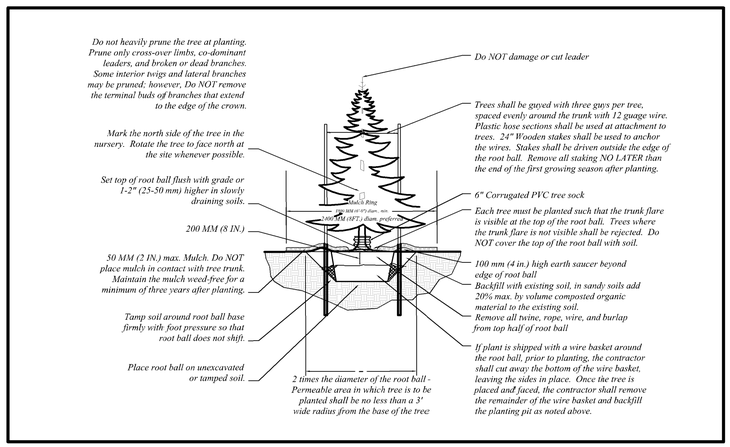

10 EVERGREEN PLANTING
NTS

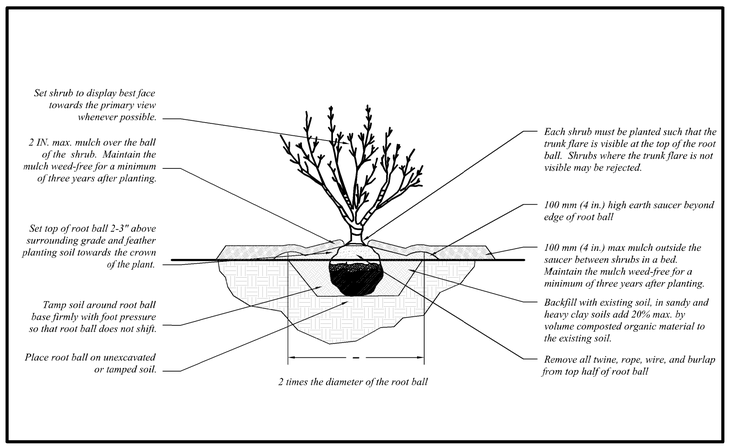

11 SHRUB PLANTING
NTS

woodburn & company
LANDSCAPE ARCHITECTURE
103 Kent Place Newmarket, New Hampshire Phone: 603.659.5949

RiverWoods Durham

LANDSCAPE DETAILS

Stone Quarry Drive Durham, New Hampshire

Drawn By:	YY, RW
Checked By:	RW
Scale:	as noted
Date:	July 13, 2017
Revisions:	October 16, 2017
	December 1, 2017
	January 10, 2017
	(50% CD) February 16, 2018
	(Permit Set) March 16, 2018
	(For Bid) April 2, 2018
	100% CD April 13, 2018
	Final Town Approval May 23, 2018

L-7

Sheet 7 of 8

© 2018 Woodburn & Company Landscape Architecture, LLC

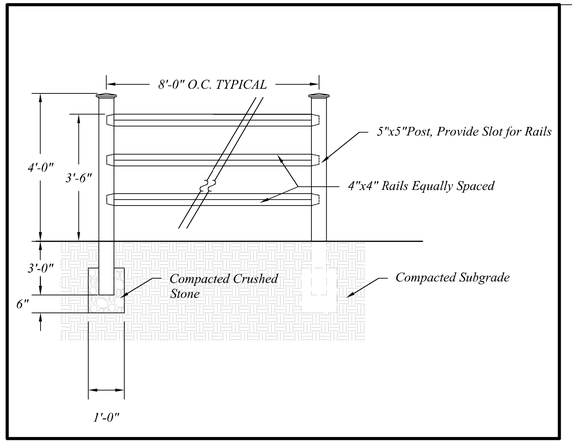

1 3 RAIL DIAMOND RAIL CEDAR FENCE
Scale: ½"=1'-0"

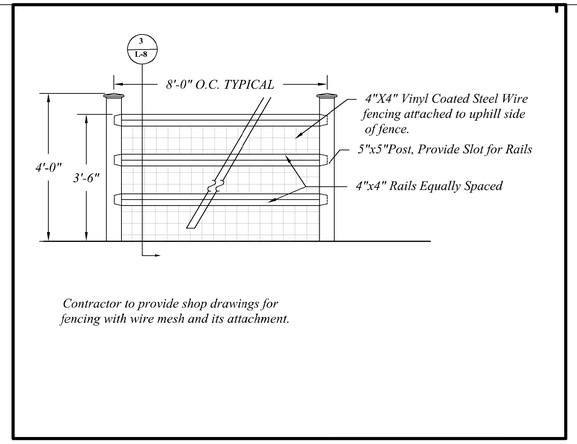

2 3 RAIL DIAMOND RAIL FENCE W. WIRE MESH BACKING
Scale: ½"=1'-0"

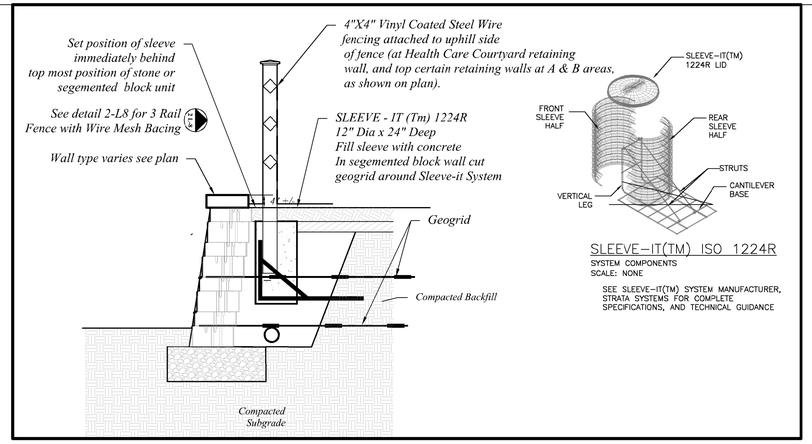

3 3 RAIL DIAMOND RAIL FENCE AT RETAINING WALL WITH SLEEVE-IT FENCE POST ANCHOR SYSTEM
Scale: NTS

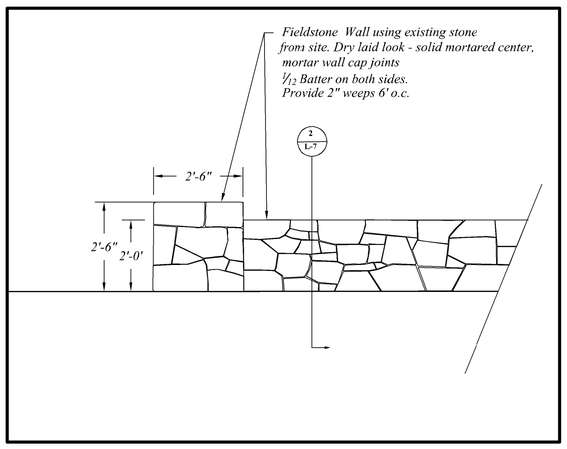

4 STONE SEAT WALL AND PIER - ELEVATION
Scale: ½"=1'-0"

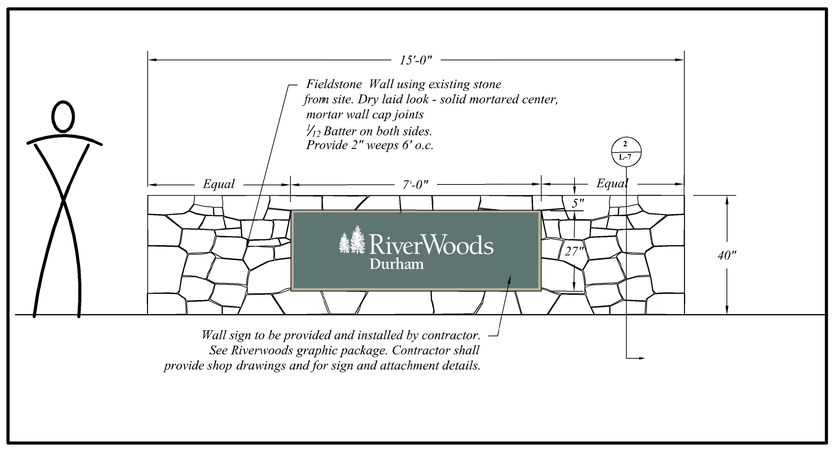

5 ENTRY WALL AND SIGN - ELEVATION

6 FLAGPOLE & BASE -TBD

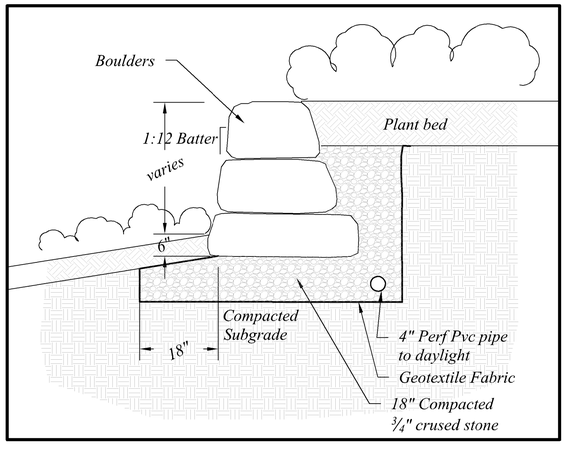

7 BOULDER RETAINING WALL
Scale: NTS

woodburn & company
LANDSCAPE ARCHITECTURE
103 Kent Place Newmarket, New Hampshire Phone: 603.659.5949

RiverWoods Durham

LANDSCAPE DETAILS

Stone Quarry Drive Durham, New Hampshire

Drawn By:	YY, RW
Checked By:	RW
Scale:	as noted
Date:	July 13, 2017
Revisions:	October 16, 2017
	December 1, 2017
	January 10, 2017
	(50% CD) February 16, 2018
	(Permit Set) March 16, 2018
	(For Bid) April 2, 2018
	100% CD April 13, 2018
	Final Town Approval May 23, 2018

L-8

Sheet 8 of 8

© 2018 Woodburn & Company Landscape Architecture, LLC

Plan View
Scale - 1" = 60ft

Statistics

Description	Symbol	Avg	Max	Min	Max/Min	Avg/Min
Parking/drive areas	+	1.5 fc	9.6 fc	0.0 fc	N/A	N/A
Sidewalk/roadway spill	+	0.4 fc	5.2 fc	0.0 fc	N/A	N/A

Schedule

Symbol	Label	Quantity	Manufacturer	Catalog Number	Description	Lamp	Number Lamps	Filename	Lumens Per Lamp	Light Loss Factor	Wattage
	S3	4	Industrial Lighting Products Inc	AL-70WLED-UNIV-30-T3 pole mounted at 16' above grade	Grey die cast aluminum housing, clear type III optics	48 white LEDs, two boards with 24 LEDs each	1	AL-70WLED-UNIV-40-T3-IES.ies	8367	0.9	70.74
	S3-HS	25	Industrial Lighting Products Inc	AL-70WLED-UNIV-30-T3-HSS pole mounted at 16' above grade	Grey die cast aluminum housing, clear type III optics	48 white LEDs, two boards with 24 LEDs each	1	AL-70WLED-UNIV-40-T3-IES.ies	8367	0.9	70.74
	S3-2	1	Industrial Lighting Products Inc	AL-70WLED-UNIV-30-T3 pole mounted at 16' above grade	Grey die cast aluminum housing, clear type III optics	48 white LEDs, two boards with 24 LEDs each	1	AL-70WLED-UNIV-40-T3-IES.ies	8367	0.9	141.48

VISIBLELIGHT

Riverwoods - Durham
Site Lighting

Designer
Scott E Drouin, LC
Date
12/13/2017
Scale
Not to Scale
Drawing No.

Summary

SEDIMENT AND EROSION CONTROL NOTES

PROJECT NAME AND LOCATION

RIVERWOODS DURHAM
TAX MAP 11 LOT 8-1 TO 8-15
STONE QUARRY DRIVE
DURHAM, NEW HAMPSHIRE

LATITUDE: 043° 08' 20" N
LONGITUDE: 070° 54' 35" W

APPLICANT:
THE RIVERWOODS GROUP
C/O JUSTINE VOGEL, CEO
5 WHITE OAK DRIVE
EXETER, NEW HAMPSHIRE 03833

DESCRIPTION

The project consists of the construction of a Continuing Care Retirement Community with associated site and utility improvements.

DISTURBED AREA

The total area to be disturbed is approximately 330,540 square feet or 7.6 acres.

NAME OF RECEIVING WATER

Closed drainage system draining into unnamed wetlands and water course flowing to Oyster River.

NPDES CONSTRUCTION GENERAL PERMIT

Contractor shall prepare a Stormwater Pollution Prevention Plan (SWPPP) is accordance with federal storm water permit requirements. The SWPPP must be prepared in a format acceptable to the Owner and three (3) copies provided to the Town at least fourteen (14) days prior to initiating construction. Contractor is responsible for all cost associated with preparation and implementation of SWPPP including any temporary erosion control measures (whether indicated or not on these drawings) as required for the contractor's sequence of activities.

The General Contractor, Site Contractor and Owner shall each file a Notice of Intent (NOI) with the U.S.E.P.A. under the NPDES Construction General Permit. (U.S.E.P.A., 1200 Pennsylvania Avenue NW, Washington, DC 20460) All work shall be in accordance with NPDES General Permit: NHR120000, including NOI requirements, effluent limitations, standards and management for construction.

The Contractor shall be responsible for obtaining a USEPA Construction Dewatering Permit, if required.

SEQUENCE OF MAJOR ACTIVITIES

1. Prepare SWPPP and file NPDES Notice of Intent, prior to any construction activities. The General Contractor, Site Contractor and Owner shall each file a Notice of Intent (N.O.I.) to U.S.E.P.A.
2. Install temporary erosion control measures, including silt fences and stabilized construction entrances prior to earth moving operations.
3. Upon completion of Items 1 through 2, clear and grub wooded areas, strip and stockpile loam. Stockpiles shall be temporarily stabilized with hay bales, mulch and surrounded by a hay bale or silt fence barrier until material is removed and final grading is complete.
4. Construct ditches and swales early in construction sequence; stabilize them prior to directing flow to them.
5. Ditches and swales shall have sides and bottom reinforced with excelsior matting, Permanent turf reinforcement shall be installed at swale sloped greater than 5%.
6. Construct drainage structures, parking area & road base materials.
7. All roadways and parking lots shall be stabilized within 72 hours of achieving finished grade.
8. Grade and shape lots to finish elevations.
9. All cut and fill slopes. not being paved, shall be seeded/loamed within 72 hours of achieving finished grade.
10. When all construction activity is complete and site is stabilized, remove all hay bales, storm check dams, silt fences and sediment that has been trapped by these devices.
11. File a Notice of Termination (N.O.T.) with U.S.E.P.A.

TEMPORARY EROSION & SEDIMENT CONTROL AND STABILIZATION PRACTICES

All work shall be in accordance with state and local permits. Work shall conform to the practices described in the "New Hampshire Stormwater Manual, Volumes 1 – 3", issued December 2008, as amended. As indicated in the sequence of Major Activities, the silt fences shall be installed prior to commencing any clearing or grading of the site. Structural controls shall be installed concurrently with the applicable activity. Once construction activity ceases permanently in an area, silt fences and any earth/dikes will be removed once permanent measures are established.

During construction, runoff will be diverted around the site with stabilized channels where possible. Sheet runoff from the site shall be filtered through hay bale barriers, stone check dams, and silt fences. All storm drain inlets shall be provided with hay bale filters or stone check dams. Stone rip rap shall be provided at the outlets of drain pipes and culverts where shown on the drawings.

Stabilize all ditches, swales, stormwater ponds, level spreaders and their contributing areas prior to directing flow to them.

Temporary and permanent vegetation and mulching is an integral component of the erosion and sedimentation control plan. All areas shall be inspected and maintained until vegetative cover is established. These control measures are essential to erosion prevention and also reduce costly rework of graded and shaped areas.

Temporary vegetation shall be maintained in these areas until permanent seeding is applied. Additionally, erosion and sediment control measures shall be maintained until permanent vegetation is established.

INSTALLATION, MAINTENANCE AND INSPECTION PROCEDURES FOR TEMPORARY EROSION AND SEDIMENT CONTROL MEASURES

A. GENERAL

These are general inspection and maintenance practices that shall be used to implement the plan:

1. The smallest practical portion of the site shall be denuded at one time, but in no case shall it exceed 5 acres at one time before disturbed areas are stabilized, except as may be approved by NHDES.
2. All sediment control measures shall be inspected at least once each week and following any storm event of 0.5 inches or greater. A SWPPP inspection report shall be made after each inspection by a qualified inspector engaged by the Owner. The qualified inspector shall be a Professional Engineer licensed in New Hampshire or be a Certified Professional in Erosion and Sediment Control approved by the Owner and NHDES. Corrective actions shall be performed to address unacceptable level of turbidity as defined by the Construction General Permit and NHDES requirements.
3. All measures shall be maintained in good working order; if a repair is necessary, it will be initiated within 24 hours.
4. Built-up sediment shall be removed from silt fence or other barriers when it has reached one-third the height of the tubular barrier or bale, or when "bulges" occur in silt fence.
5. All diversion dikes shall be inspected and any breaches promptly repaired.
6. Temporary seeding and planting shall be inspected for bare spots, washouts, and unhealthy growth.
7. The owner's authorized engineer shall inspect the site on a periodic basis to review compliance with the plans.
8. The Contractor's site superintendent shall be responsible for maintenance and repair of erosion control practices.
9. Perimeter controls shall be installed prior to earth moving operations.
10. All ditches and swales shall be stabilized prior to directing runoff to them.
11. Temporary water diversion (swales, basins, etc) shall be used as necessary until areas are stabilized.
12. Ponds and swales shall be installed early on in the construction sequence (before rough grading site)
13. All cut and fill slopes shall be seeded/loamed within 72 hours of achieving finished grade.

INSTALLATION, MAINTENANCE AND INSPECTION PROCEDURES FOR TEMPORARY EROSION AND SEDIMENT CONTROL MEASURES (CON'T)

14. An area shall be considered stable if one of the following has occurred:
    a. Base coarse gravels have been installed in areas to be paved;
    b. A minimum of 85% vegetated growth as been established;
    c. A minimum of 3 inches of non-erosive material such as stone of riprap has been installed;
    – or –
    d. Erosion control blankets have been properly installed.
15. The length of time of exposure of area disturbed during construction shall not exceed 45 days.
16. Project shall be managed in a manner that meets Chapter Agr 3800 relative to invasive species.

B. MULCHING

Mulch shall be used on highly erodible soils, on critically eroding areas, on areas where conservation of moisture will facilitate plant establishment, and where shown on the plans.

1. Timing – In order for mulch to be effective, it must be in place prior to major storm events. There are two (2) types of standards which shall be used to assure this:
   a. Apply mulch prior to any storm event. This is applicable when working within 100 feet of wetlands. It will be necessary to closely monitor weather predictions, usually by contacting the National Weather Service in Concord, to have adequate warning of significant storms.
   b. Required Mulching within a specified time period. The time period can range from 21 to 28 days of inactivity on a area, the length of time varying with site conditions. Professional judgment shall be used to evaluate the interaction of site conditions (soil erodibility, season of year, extent of disturbance, proximity to sensitive resources, etc.) and the potential impact of erosion on adjacent areas to choose an appropriate time restriction.
2. Guidelines for Winter Mulch Application –

Type	Rate per 1,000 s.f.	Use and Comments
Hay or Straw	70 to 90 lbs.	Must be dry and free from mold. May be used with plantings.
Wood Chips or Bark Mulch	460 to 920 lbs.	Used mostly with trees and shrub plantings.
Jute and Fibrous Matting (Erosion Blanket)	As per manufacturer Specifications	Used in slope areas, water courses and other control areas.
Crushed Stone 1/4" to 1-1/2" dia.	Spread more than 1/2" thick	Effective in controlling wind and water erosion.
Erosion Control Mix	2" thick (min)	* The organic matter content is between 80 and 100%, dry weight basis. * Particle size by weight is 100% passing a 6" screen and a minimum of 70 %, maximum of 85%, passing a 0.75" screen. * The organic portion needs to be fibrous and elongated. * Large portions of silts, clays or fine sands are not acceptable in the mix. * Soluble salts content is less than 4.0 mmhos/cm. * The pH should fall between 5.0 and 8.0.

3. Maintenance – All mulches must be inspected periodically, in particular after rainstorms, to check for rill erosion. If less than 90% of the soil surface is covered by mulch, additional mulch shall be immediately applied.

C. TEMPORARY GRASS COVER

1. Seedbed Preparation –
   Apply Fertilizer (refer to Landscape Drawings and Specs)
2. Seeding –
   a. Utilize annual rye grass at a rate of 40 lbs/acre.
   b. Where the soil has been compacted by construction operations, loosen soil to a depth of two (2) inches before applying fertilizer, lime and seed.
   c. Apply seed uniformly by hand, cyclone seeder, or hydroseeder (slurry including seed and fertilizer). Hydroseedings, which include mulch, may be left on soil surface. Seeding rates must be increased 10% when hydroseeding.
3. Maintenance –
   Temporary seedings shall be periodically inspected. At a minimum, 95% of the soil surface should be covered by vegetation. If any evidence of erosion or sedimentation is apparent, repairs shall be made and other temporary measures used in the interim (mulch, filter barriers, check dams, etc.).

D. FILTERS

1. Tubular Sediment Barrier
   a. See detail.
   b. Install per manufacturer's requirements.
2. Silt Fence (if used)
   a. Synthetic filter fabric shall be a pervious sheet of propylene, nylon, polyester or ethylene yarn and shall be certified by the manufacturer or supplier as conforming to the following requirements:

Physical Property	Test	Requirements
Filtering Efficiency	VTM-51	75% minimum
Tensile Strength at 20% Maximum Elongation*	VTM-52	Extra Strength 50 lb/lin in (min) Standard Strength 30 lb/lin in (min)
Flow Rate	VTM-51	0.3 gal/sf/min (min)

   * Requirements reduced by 50 percent after six (6) months of installation.

   Synthetic filter fabric shall contain ultraviolet ray inhibitors and stabilizer to provide a minimum of six (6) months of expected usable construction life at a temperature range of 0 degrees F to 120° F.

   b. Posts shall be spaced a maximum of ten (10) feet apart at the barrier location or as recommended by the manufacturer and driven securely into the ground (minimum of 16 inches).
   c. A trench shall be excavated approximately six (6) inches wide and eight (8) inches deep along the line of posts and upslope from the barrier.
   d. When standard strength filter fabric is used, a wire mesh support fence shall be fastened securely to the upslope side of the posts using heavy duty wire staples at least one (1) inch long, tie wires or hog rings. The wire shall extend no more than 36 inches above the original ground surfaces.
   e. The "standard strength" filter fabric shall be stapled or wired to the fence, and eight (8) inches of the fabric shall be extended into the trench. The fabric shall not extend more than 36 inches above the original ground surface. Filter fabric shall not be stapled to existing trees.
   f. When extra strength filter fabric and closer post spacing are used, the wire mesh support fence may be eliminated. In such a case, the filter fabric is stapled or wired directly to the posts with all other provisions of item (g) applying.
   g. The trench shall be backfilled and the soil compacted over the filter fabric.
   h. Silt fences shall be removed when they have served their useful purpose but not before the upslope areas has been permanently stabilized.
3. Sequence of Installation –
   Sediment barriers shall be installed prior to any soil disturbance of the contributing upslope drainage area.
4. Maintenance –
   a. Silt fence barriers shall be inspected immediately after each rainfall and at least daily during prolonged rainfall. They shall be repaired if there are any signs of erosion or sedimentation below them. Any required repairs shall be made immediately. If there are signs of undercutting at the center or the edges, or impounding of large volumes of water, the sediment barriers shall be replaced with a temporary stone check dam.
   b. Should the fabric on a silt fence or filter barrier decompose or become ineffective prior to the end of the expected usable life and the barrier still is necessary, the fabric shall be replaced promptly.
   c. Sediment deposits must be removed when deposits reach approximately one-third (1/3) the height of the barrier.
   d. Any sediment deposits remaining in place after the silt fence or other barrier is no longer required shall be removed. The area shall be prepared and seeded.
   e. Additional stone may have to be added to the construction entrance, rock barrier and riprap lined swales, etc., periodically to maintain proper function of the erosion control structure.

E. PERMANENT SEEDING –

1. Bedding – stones larger than 1½", trash, roots, and other debris that will interfere with seeding and future maintenance of the area should be removed. Where feasible, the soil should be tilled to a depth of 6" to prepare a seedbed and mix fertilizer (refer to Landscape Drawings and Specifications) into the soil.
2. Fertilizer (refer to Landscape Drawings and Specifications) – lime and fertilizer should be applied evenly over the area prior to or at the time of seeding and incorporated into the soil. Kinds and amounts of lime and fertilizer should be based on an evaluation of soil tests.
3. Seed Mixture (See Landscape Drawings for additional information):
   3.1. Lawn seed mix shall be a fresh, clean new seed crop. The Contractor shall furnish a dealer's guaranteed statement of the composition of the mixture and the percentage of purity and germination of each variety.
   3.2. Seed mixture shall conform to landscape specifications
4. Sodding – sodding is done where it is desirable to rapidly establish cover on a disturbed area. Sodding on area may be substituted for permanent seeding procedures anywhere on site. Bed preparation, fertilizing, and placement of sod shall be performed according to the S.C.S. Handbook. Sodding is recommended for steep sloped areas, areas immediately adjacent to sensitive water courses, easily erodible soils (fine sand/silt), etc.

WINTER CONSTRUCTION NOTES

1. All proposed vegetated areas which do not exhibit a minimum of 85% vegetative growth by October 15th, or which are disturbed after October 15th, shall be stabilized by seeding and installing erosion control blankets on slopes greater than 3:1, and elsewhere seeding and placing 3 to 4 tons of mulch per acre, secured with anchored netting. The installation of erosion control blankets or mulch and netting shall not occur over accumulated snow or on frozen ground and shall be completed in advance of thaw or spring melt events;
2. All ditches or swales which do not exhibit a minimum of 85% vegetative growth by October 15th, or which are disturbed after October 15th, shall be stabilized temporarily with stone or erosion control blankets appropriate for the design flow conditions; and
3. After November 15th, incomplete road or parking surfaces where work has stopped for the winter season shall be protected with a minimum of 3 inches of crushed gravel per NHDOT Item 304.3.

HOUSEKEEPING

The following general performance standards apply to the proposed project both during and after construction.

A. Spill prevention: Controls must be used to prevent pollutants from being discharged from materials and equipment on-site, including storage practices to minimize exposure of the materials to stormwater, and appropriate spill prevention, containment, and response planning and implementation.

B. Groundwater protection: During construction, liquid petroleum products and other hazardous materials with the potential to contaminate groundwater may not be stored or handled in areas of the site draining to an infiltration area. An "infiltration area" is any area of the site that by design or as a result of soils, topography and other relevant factors, accumulates runoff that infiltrates into the soil. Dikes, berms, sumps, and other forms of secondary containment that prevent discharge to groundwater may be used to isolate portions of the site for the purposes of storage and handling of these materials.

C. Fugitive sediment and dust: Actions must be taken to insure that activities do not result in noticeable erosion of soils or fugitive dust emissions during or after construction. Oil may not be used for dust control.

D. Debris and other materials: Litter, construction debris, and chemicals exposed to stormwater must be prevented from becoming a pollutant source.

E. Trench or foundation dewatering: Trench dewatering is the removal of water from trenches, foundations, cofferdams, ponds, and other areas within the construction area that retain water after excavation. In most cases, the collected water is heavily silted and hinders correct and safe construction practices. The collected water must be removed from the ponded area, either through gravity or pumping, and must be spread through natural wooded buffers or removed to areas that are specifically designed to collect the maximum amount of sediment possible, like a cofferdam sedimentation basin. Avoid allowing the water to flow over disturbed areas of the site. Equivalent measures may be taken if approved.

Long Term Inspection & Maintenance Schedule

	Spring	Fall or Yearly	After Major Storm
Vegetated Areas			
Inspect all slopes and embankments	x		x
Replant bare areas or areas with sparse growth	x		x
Armor areas with rill erosion with an appropriate lining or divert the erosive flows to on-site areas able to withstand concentrated flows.	x		x
Stormwater Channels			
Inspect ditches, swales and other open stormwater channels	x	x	x
Remove any obstructions and accumulated sediments or debris	x	x	
Control vegetated growth and woody vegetation		x	
Repair any erosion of the ditch lining		x	
Mow vegetated ditches		x	
Remove woody vegetation growing through riprap		x	
Repair any slumping side slopes		x	
Replace riprap where underlying filter fabric or underdrain gravel is exposed or where stones have been dislodged		x	
Culverts			
Remove accumulated sediments and debris at inlet, outlet and within the conduit	x	x	x
Repair any erosion damage at the culvert's inlet and outlet	x	x	x
Remove woody vegetation growing through riprap		x	
Roadways and Parking Surfaces			
Remove accumulated winter sand along roadways	x		
Sweep pavement to remove sediment	x		
Grade road shoulders and remove excess sand either manually or by a front-end loader	x		
Grade gravel roads and gravel shoulders	x		
Clean out sediment contained in water bars or open-top culverts	x		
Ensure that stormwater is not impeded by accumulations of material or false ditches in the roadway shoulder	x		
Stormwater Management Gallery (SMG)			
Inspect isolator row for sediment accumulation		x	
JetVac isolator row per manufacturer specifications		x	
Underground Sand Filter (USF)			
Filter media shall be replaced periodically			
Inspect unit for drawdown time. If system does not drain in 72 hours, filter media shall be replaced to restore filtration function		x	
Porous Pavement			
Eliminate potential source of unwanted sediment	x	x	
Routine Quarterly Vacuum Sweeping	x	x	
The use of sand in winter is prohibited			

NOTE:
ALL FACILITIES SHOULD BE INSPECTED ON AN ANNUAL BASIS AT A MINIMUM. IN ADDITION, ALL FACILITIES SHOULD BE INSPECTED AFTER A SIGNIFICANT PRECIPITATION EVENT TO ENSURE THE FACILITY IS DRAINING APPROPRIATELY AND TO IDENTIFY ANY DAMAGE THAT OCCURRED AS A RESULT OF THE INCREASED RUNOFF. FOR THE PURPOSE OF THIS STORMWATER MANAGEMENT PROGRAM, A SIGNIFICANT RAINFALL EVENT IS CONSIDERED AN EVENT OF THREE (3) INCHES IN A 24-HOUR PERIOD OR 0.5 INCHES IN A ONE-HOUR PERIOD. IT IS ANTICIPATED THAT A SHORT, INTENSE EVENT IS LIKELY TO HAVE A HIGHER POTENTIAL OF EROSION FOR THIS SITE THAN A LONGER, HIGH VOLUME EVENT.

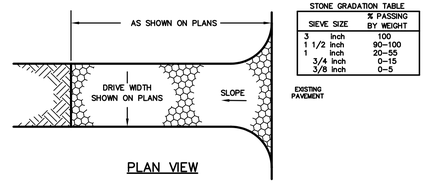

STONE GRADATION TABLE

SIEVE SIZE	% PASSING BY WEIGHT
3 inch	100
1 1/2 inch	90–100
1 inch	20–55
3/4 inch	0–15
3/8 inch	0–5

PLAN VIEW

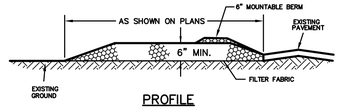

PROFILE

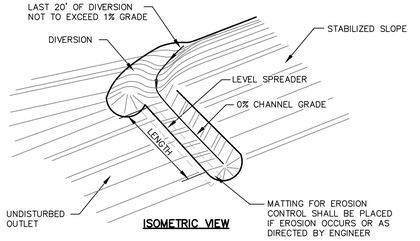

ISOMETRIC VIEW

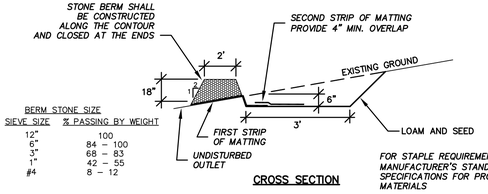

BERM STONE SIZE

SIEVE SIZE	% PASSING BY WEIGHT
12"	100
6"	84 – 100
3"	68 – 83
1"	42 – 55
#4	8 – 12

CROSS SECTION

LEVEL SPREADERS SHALL BE CONSTRUCTED PER STORMWATER MANAGEMENT FOR MAINE, "VOLUME III BMPS TECHNICAL DESIGN MANUAL, CHAPTER 5.2.2, BUFFER WITH STONE BERMED LEVEL LIP SPREADER", JANUARY 2006 SPECIFICATIONS.

LEVEL SPREADER

NOT TO SCALE

CONSTRUCTION SPECIFICATIONS

1. STONE SIZE – NHDOT STANDARD STONE SIZE #4 – SECTION 703 OF NHDOT STANDARD.
2. LENGTH – DETAILED ON PLANS (50 FOOT MINIMUM).
3. THICKNESS – SIX (6) INCHES (MINIMUM).
4. WIDTH – FULL DRIVE WIDTH UNLESS OTHERWISE SPECIFIED.
5. FILTER FABRIC – MIRAFI 600X OR EQUAL APPROVED BY ENGINEER.
6. SURFACE WATER CONTROL – ALL SURFACE WATER THAT IS FLOWING TO OR DIVERTED TOWARD THE CONSTRUCTION ENTRANCE SHALL BE PIPED BENEATH THE ENTRANCE. IF PIPING IS IMPRACTICAL, A BERM WITH 5:1 SLOPES THAT CAN BE CROSSED BY VEHICLES MAY BE SUBSTITUTED FOR THE PIPE.
7. MAINTENANCE – THE ENTRANCE SHALL BE MAINTAINED IN A CONDITION WHICH WILL PREVENT TRACKING OR FLOWING OF SEDIMENT ONTO PUBLIC RIGHTS-OF-WAY. THIS WILL REQUIRE PERIODIC TOP DRESSING WITH ADDITIONAL STONE OR ADDITIONAL LENGTH AS CONDITIONS DEMAND AND REPAIR AND/OR CLEANOUT OF ANY MEASURES USED TO TRAP SEDIMENT. ALL SEDIMENT SPILLED, DROPPED, WASHED OR TRACKED ONTO PUBLIC RIGHTS-OF-WAY MUST BE REMOVED IMMEDIATELY.
8. WHEELS SHALL BE CLEANED TO REMOVE MUD PRIOR TO ENTRANCE ONTO PUBLIC RIGHTS-OF-WAY. WHEN WASHING IS REQUIRED, IT SHALL BE DONE ON AN AREA STABILIZED WITH STONE WHICH DRAINS INTO AN APPROVED SEDIMENT TRAPPING DEVICE.
9. STABILIZED CONSTRUCTION EXITS SHALL BE INSTALLED AT ALL ENTRANCES TO PUBLIC RIGHTS-OF-WAY, AT LOCATIONS SHOWN ON THE PLANS, AND/OR WHERE AS DIRECTED BY THE ENGINEER.

STABILIZED CONSTRUCTION EXIT

NOT TO SCALE

FINAL APPROVAL BY DURHAM PLANNING BOARD.
CERTIFIED BY MICHAEL BEHRENDT, TOWN PLANNER
CERTIFIED _____
DATE _____

P4836

ALTUS ENGINEERING, INC.
133 COURT STREET PORTSMOUTH, NH 03801
VOICE: (603) 433-2335
FAX: (603) 433-4194

STATE OF NEW HAMPSHIRE
JEFFREY K. CLIFFORD No. 6524
LICENSED PROFESSIONAL ENGINEER

ISSUED FOR:
FINAL TOWN APPROVAL

ISSUE DATE:
MAY 23, 2018

REVISIONS

NO.	DESCRIPTION	BY	DATE
0	INITIAL SUBMISSION	JKC	7/19/17
1	PB RE-SUBMISSION	JKC	10/16/17
2	PB RE-SUBMISSION	JKC	12/05/17
3	100% D.D.	JKC	12/22/17
4	NHDES AoT SUBMISSION	JKC	1/18/18
5	50% C.D.	JKC	2/16/18
6	PERMIT SET	JKC	3/16/18
7	BID SET	JKC	4/02/18
8	100% C.D.	JKC	4/13/18
9	Final Town Approval	JKC	5/23/18

DRAWN BY: RMB
APPROVED BY: JKC
DRAWING FILE: 4836DS.DWG

SCALE: N.T.S.

LAND OWNER – SUBJECT PARCEL:
RIVERWOODS DURHAM
5 WHITE OAK DRIVE
EXETER, NH 03833

APPLICANT:
THE RIVERWOODS GROUP
5 WHITE OAK DRIVE
EXETER, NH 03833

PROJECT:
RIVERWOODS DURHAM
STONE QUARRY DRIVE
DURHAM, NH

TITLE:
EROSION CONTROL NOTES

SHEET NUMBER:
C - 6.0

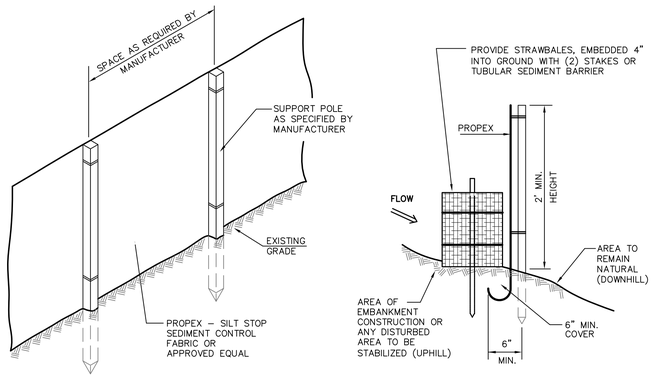

FRONT VIEW SIDE VIEW

DOUBLE SILT BARRIER DETAIL

NOT TO SCALE

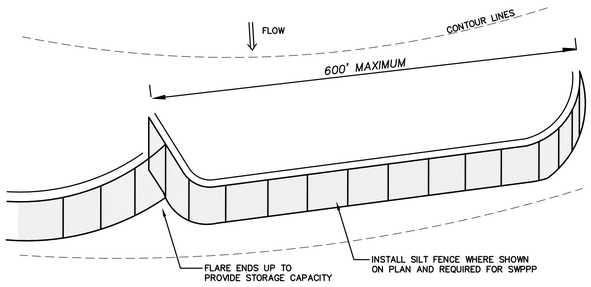

MAINTENANCE

1. SILT FENCE SHALL BE INSPECTED IMMEDIATELY AFTER EACH RAINFALLAND AT LEAST DAILY DURING PROLONGED RAINFALL. ANY REPAIRS THAT ARE REQUIRED SHALL BE MADE IMMEDIATELY.
2. IF THE FABRIC ON A SILT FENCE SHOULD DECOMPOSE OR BECOME INEFFECTIVE DURING THE EXPECTED LIFE OF THE FENCE, THE FABRIC SHALL BE REPLACED PROMPTLY.
3. SEDIMENT DEPOSITS SHALL BE INSPECTED AFTER EVERY STORM EVENT. THE DEPOSITS SHALL BE REMOVED WHEN THEY REACH APPROXIMATELY ONE–HALF THE HEIGHT OF THE BARRIER.
4. SEDIMENT DEPOSITS THAT ARE REMOVED OR LEFT IN PLACE AFTER THE FABRIC HAS BEEN REMOVED SHALL BE GRADED TO CONFORM WITH THE EXISTING TOPOGRAPHY AND VEGETATED.

CONSTRUCTION SPECIFICATIONS

1. THE GEOTEXTILE FABRIC SHALL MEET THE DESIGN CRITERIA FOR SILT FENCES.
2. THE FABRIC SHALL BE EMBEDDED A MINIMUM OF 8 INCHES INTO THE GROUND AND THE SOIL COMPACTED OVER THE EMBEDDED FABRIC.
3. WOVEN WIRE FENCE SHALL BE FASTENED SECURELY TO THE FENCE POSTS WITH WIRE TIES OR STAPLES.
4. FILTER CLOTH SHALL BE FASTENED SECURELYTO THE WOVEN WIRE FENCE WITH TIES SPACED EVERY 24 INCHES AT THE TOP, MID–SECTION AND BOTTOM.
5. WHEN TWO SECTIONS OF THE FILTER CLOTH ADJOIN EACH OTHER, THEY SHALL OVERLAP BY 6 INCHES, FOLDED AND STAPLED.
6. FENCE POSTS SHALL BE A MINIMUM OF 36 INCHES LONG AND DRIVEN A MINIMUM OF 16 INCHES INTO THE GROUND. WOOD POSTS SHALL BE OF SOUND QUALITY HARDWOOD AND SHALL HAVE A CROSS SECTIONAL AREA OF 3.0 SQUARE INCHES.
7. MAINTENANCE SHALL BE PERFORMED AS NEEDED TO PREVENT BULGES IN THE SLIT SILT DUE TO DEPOSITION OF SEDIMENT.

SILT FENCE LAYOUT

NOT TO SCALE

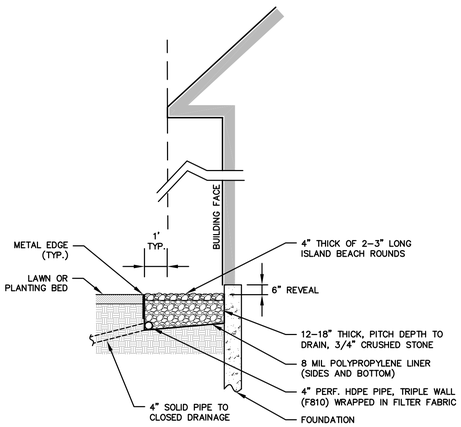

DRIP STRIP

NOT TO SCALE

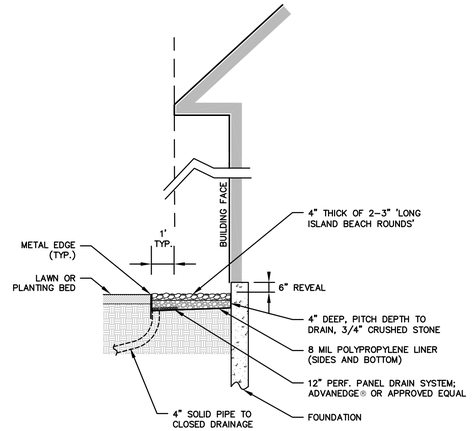

DRIP STRIP (ALTERNATE)

NOT TO SCALE

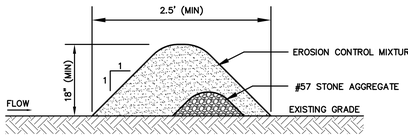

NOTES

1. ORGANIC FILTER BERMS MAY BE UTILIZED IN LIEU OF SILT FENCE OR OTHER SEDIMENT BARRIERS.
2. THE EROSION CONTROL MIXTURE USED IN FILTER BERMS SHALL BE A WELL–GRADED MIX OF PARTICLE SIZES THAT MAY CONTAIN ROCKS LESS THAN 4" IN DIAMETER, STUMP GRINDINGS, SHREDDED OR COMPOSTED BARK, AND/OR ACCEPTABLE MANUFACTURED PRODUCTS AND SHALL BE FREE OF REFUSE, PHYSICAL CONTAMINANTS AND MATERIAL TOXIC TO PLANT GROWTH. EROSION CONTROL MIXTURE SHALL MEET THE FOLLOWING STANDARDS:
   a) THE ORGANIC CONTENT SHALL BE 80–100% OF DRY WEIGHT.
   b) PARTICLE SIZE BY WEIGHT SHALL BE 100% PASSING A 6" SCREEN, AND 70–85% PASSING A 0.75" SCREEN.
   c) THE ORGANIC PORTION SHALL BE FIBROUS AND ELONGATED.
   d) LARGE PORTIONS OF SILTS, CLAYS, OR FINE SANDS SHALL NOT BE INCLUDED IN THE MIXTURE.
   e) SOLUBLE SALTS CONTENT SHALL BE >4.0mmhos/cm.
   f) THE pH SHALL BE BETWEEN 5.0 AND 8.0.
3. ORGANIC FILTER BERMS SHALL BE INSTALLED ALONG A RELATIVELY LEVEL CONTOUR. IT MAY BE NECESSARY TO CUT TALL GRASSES OR WOODY VEGETATION TO AVOID CREATING VOIDS AND BRIDGES THAT WOULD ENABLE FINES TO WASH UNDER THE BERM.
4. ON SLOPES LESS THAN 5% OR AT THE BOTTOM OF SLOPES NO STEEPER THAN 3:1 AND UP TO 20' LONG, THE BERM SHALL BE A MINIMUM OF 12" HIGH (AS MEASURED ON THE UPHILL SIDE) AND A MINIMUM OF 36" WIDE. ON LONGER AND/OR STEEPER SLOPES, THE BERM SHALL BE TALLER AND WIDER TO ACCOMMODATE THE POTENTIAL FOR ADDITIONAL RUNOFF (MAXIMUM HEIGHT SHALL NOT EXCEED 2').
5. FROZEN GROUND, OUTCROPS OF BEDROCK, AND VERY ROOTED FORESTED AREAS PRESENT THE MOST PRACTICAL AND EFFECTIVE LOCATIONS FOR ORGANIC FILTER BERMS. OTHER BMP'S SHOULD BE USED AT LOW POINTS OF CONCENTRATED RUNOFF, BELOW CULVERT OUTLET APRONS, AROUND CATCH BASINS, AND AT THE BOTTOM OF STEEP PERIMETER SLOPES THAT HAVE A LARGE CONTRIBUTING AREA.
6. SEDIMENT SHALL BE REMOVED FROM BEHIND THE FILTER BERMS WHEN IT HAS ACCUMULATED TO ONE HALF THE ORIGINAL HEIGHT OF THE BERM.
7. ORGANIC FILTER BERMS MAY BE LEFT IN PLACE ONCE THE SITE IS STABILIZED PROVIDED ANY SEDIMENT DEPOSITS TRAPPED BY THEM ARE REMOVED AND DISPOSED OF PROPERLY.

ORGANIC FILTER BERM

NOT TO SCALE

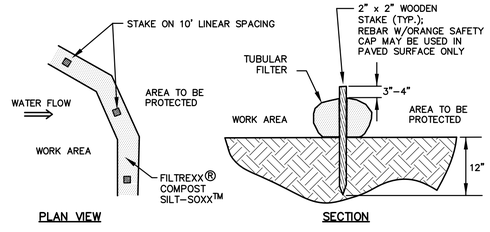

PLAN VIEW SECTION

NOTES:

1. *SILTSOXX OR APPROVED EQUAL SHALL BE USED FOR TUBULAR SEDIMENT BARRIERS.*
2. *ALL MATERIAL TO MEET MANUFACTURER'S SPECIFICATIONS.*
3. *COMPOST/SOIL/ROCK/SEED FILL MATERIAL SHALL BE ADJUSTED AS NECESSARY TO MEET THE REQUIREMENTS OF THE SPECIFIC APPLICATION.*
4. *ALL SEDIMENT TRAPPED BY BARRIER SHALL BE DISPOSED OF PROPERLY.*

TUBULAR SEDIMENT BARRIER DETAIL

NOT TO SCALE

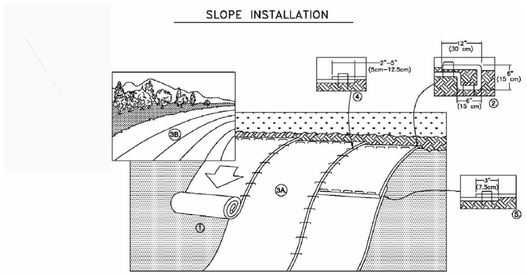

1. PREPARE SOIL BEFORE INSTALLING ROLLED EROSION CONTROL PRODUCTS (RECP's), INCLUDING ANY NECESSARY APPLICATION OF LIME, FERTILIZER, AND SEED.
   NOTE: WHEN USING CELL–O–SEED DO NOT SEED PREPARED AREA. CELL–O–SEED MUST BE INSTALLED WITH PAPER SIDE DOWN.
2. BEGIN AT THE TOP OF THE SLOPE BY ANCHORING THE RECP's IN A 6" (15 CM) DEEP X 6" (15 CM) WIDE TRENCH WITH APPROXIMATELY 12" (30cm) OF RECP's EXTENDED BEYOND THE UP–SLOPE PORTION OF THE TRENCH. ANCHOR THE RECP's WITH A ROW OF STAPLES/STAKES APPROXIMATELY 12" (30 CM) APART IN THE BOTTOM OF THE TRENCH. BACKFILL AND COMPACT THE TRENCH AFTER STAPLING. APPLY SEED TO COMPACTED SOIL AND FOLD REMAINING 12" (30 CM) PORTION OF RECP's BACK OVER SEED AND COMPACTED SOIL. SECURE RECP's OVER COMPACTED SOIL WITH A ROW OF STAPLES/STAKES SPACED APPROXIMATELY 12" (30 CM) APART ACROSS THE WIDTH OF THE RECP's.
3. ROLL THE RECP's (A) DOWN OR (B) HORIZONTALLY ACROSS THE SLOPE. RECP's WILL UNROLL WITH APPROPRIATE SIDE AGAINST THE SOIL SURFACE. ALL RECP's MUST BE SECURELY FASTENED TO SOIL SURFACE BY PLACING STAPLES/STAKES IN APPROPRIATE LOCATIONS AS SHOWN IN THE STAPLE PATTERN GUIDE. WHEN USING THE DOT SYSTEM™, STAPLES/STAKES SHOULD BE PLACED THROUGH EACH OF THE COLORED DOTS CORRESPONDING TO THE APPROPRIATE STAPLE PATTERN.
4. THE EDGES OF PARALLEL RECP's MUST BE STAPLED WITH APPROXIMATELY 2" – 5" (5 CM – 12.5 CM) OVERLAP DEPENDING ON RECP's TYPE.
5. CONSECUTIVE RECP's SPLICED DOWN THE SLOPE MUST BE PLACED END OVER END (SHINGLE STYLE) WITH AN APPROXIMATE 3" (7.5 CM) OVERLAP. STAPLE THROUGH OVERLAPPED AREA, APPROXIMATELY 12" (30 CM) APART ACROSS ENTIRE RECP's WIDTH.
   NOTE:
   *IN LOOSE SOIL CONDITIONS, THE USE OF STAPLE OR STAKE LENGTHS GREATER THAN 6" (15 CM) MAY BE NECESSARY TO PROPERLY SECURE THE RECP's.

EROSION CONTROL BLANKET

NOT TO SCALE

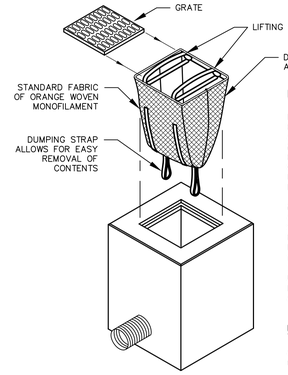

INSTALLATION AND MAINTENANCE:

INSTALLATION: REMOVE THE GRATE FROM CATCH BASIN. IF USING OPTIONAL OIL ABSORBENTS; PLACE ABSORBENT PILLOW IN UNIT. STAND GRATE ON END. MOVE THE TOP LIFTING STRAPS OUT OF THE WAY AND PLACE THE GRATE INTO CATCH BASIN INSERT SO THE GRATE IS BELOW THE TOP STRAPS AND ABOVE THE LOWER STRAPS. HOLDING THE LIFTING DEVICES, INSERT THE GRATE INTO THE INLET.

MAINTENANCE: REMOVE ALL ACCUMULATED SEDIMENT AND DEBRIS FROM VICINITY OF THE UNIT AFTER EACH STORM EVENT. AFTER EACH STORM EVENT AND AT REGULAR INTERVALS, LOOK INTO THE CATCH BASIN INSERT. IF THE CONTAINMENT AREA IS MORE THAN 1/3 FULL OF SEDIMENT, THE UNIT MUST BE EMPTIED. TO EMPTY THE UNIT, LIFT THE UNIT OUT OF THE INLET USING THE LIFTING STRAPS AND REMOVE THE GRATE. IF USING OPTIONAL ABSORBENTS; REPLACE ABSORBENT WHEN NEAR SATURATION.

UNACCEPTABLE INLET PROTECTION METHOD:

A SIMPLE SHEET OF GEOTEXTILE UNDER THE GRATE IS NOT ACCEPTABLE.

STORM DRAIN INLET PROTECTION

NOT TO SCALE

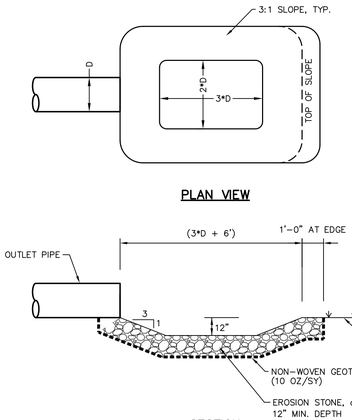

PLAN VIEW

SECTION

1. CONSTRUCT PLUNGE POOL TO THE WIDTHS AND LENGTHS SHOWN ON THE PLAN.
2. THE SUBGRADE FOR THE GEOTEXTILE FABRIC AND RIPRAP SHALL BE PREPARED TO LINES AND GRADES SHOWN ON THE PLANS.
3. EROSION STONE USED FOR THE PLUNGE POOL SHALL MEET THE FOLLOWING GRADATION.
4. GEOTEXTILE FABRICS SHALL BE PROTECTED FROM PUNCTURE OR TEARING DURING THE PLACEMENT OF THE EROSION STONE. DAMAGED AREAS IN THE FABRIC SHALL BE REPAIRED BY PLACING A PIECE OF FABRIC OVER THE DAMAGED AREA OR BY COMPLETE REPLACEMENT OF THE FABRIC. ALL OVERLAPS REQUIRED FOR REPAIRS OR JOINING TWO PIECES OF FABRIC SHALL BE A MINIMUM OF 18 INCHES.
5. THE EROSION STONE MAY BE PLACED BY EQUIPMENT AND SHALL BE CONSTRUCTED TO THE FULL LAYER THICKNESS IN ONE OPERATION AND IN SUCH A MANNER AS TO PREVENT SEGREGATION OF THE STONE SIZES.

PLUNGE POOL

NOT TO SCALE

FINAL APPROVAL BY DURHAM PLANNING BOARD.
CERTIFIED BY MICHAEL BEHRENDT, TOWN PLANNER
CERTIFIED _____
DATE _____

P4836

ALTUS ENGINEERING, INC.
133 COURT STREET PORTSMOUTH, NH 03801
VOICE: (603) 433–2335
FAX: (603) 433–4194

STATE OF NEW HAMPSHIRE — JEFFREY K. CLIFFORD No. 6524 — LICENSED PROFESSIONAL ENGINEER

ISSUED FOR: *FINAL TOWN APPROVAL*

ISSUE DATE: *MAY 23, 2018*

REVISIONS

NO.	DESCRIPTION	BY	DATE
0	INITIAL SUBMISSION	JKC	7/19/17
1	PB RE–SUBMISSION	JKC	10/16/17
2	PB RE–SUBMISSION	JKC	12/05/17
3	100% D.D.	JKC	12/22/17
4	NHDES AoT SUBMISSION	JKC	1/18/18
5	50% C.D.	JKC	2/16/18
6	PERMIT SET	JKC	3/16/18
7	BID SET	JKC	4/02/18
8	100% C.D.	JKC	4/13/18
9	Final Town Approval	JKC	5/23/18

DRAWN BY: RMB
APPROVED BY: JKC
DRAWING FILE: 4836DS.DWG

SCALE: N.T.S.

LAND OWNER – SUBJECT PARCEL:

RIVERWOODS DURHAM
5 WHITE OAK DRIVE
EXETER, NH 03833

APPLICANT:

THE RIVERWOODS GROUP
5 WHITE OAK DRIVE
EXETER, NH 03833

PROJECT:

RIVERWOODS DURHAM
STONE QUARRY DRIVE
DURHAM, NH

TITLE:

EROSION CONTROL DETAILS

SHEET NUMBER:

C - 6.1

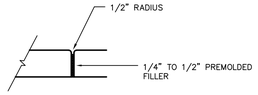

EXPANSION JOINT

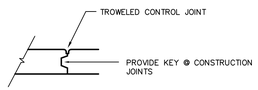

CONSTRUCTION/CONTROL JOINT

(TO BE INSTALLED AT ENTRY/DROP OFF AREAS)

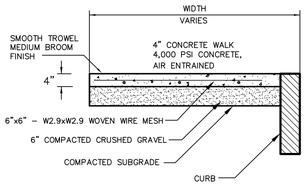

SECTION

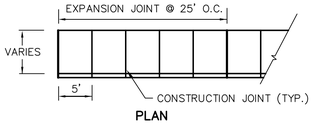

PLAN

CONCRETE SIDEWALK DETAIL

NOT TO SCALE

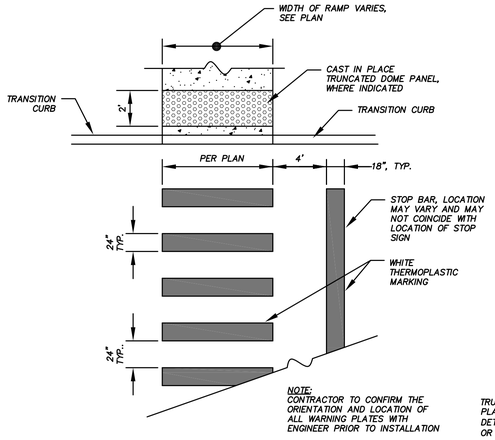

CROSSWALK DETAIL

NOT TO SCALE

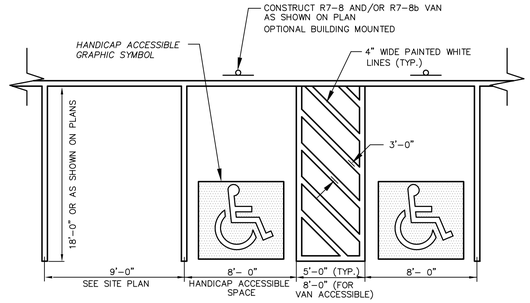

STALL PARKING

NOT TO SCALE

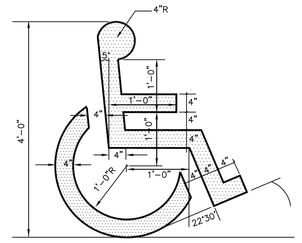

NOTE:
SYMBOL TO BE PAINTED IN ALL HANDICAPPED ACCESSIBLE SPACES

ADA SYMBOL

NOT TO SCALE

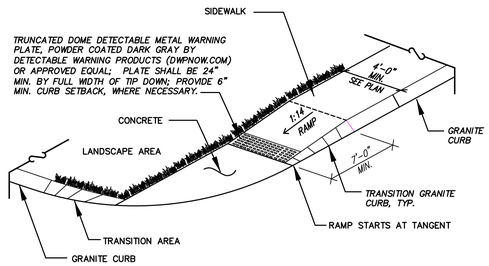

NOTE:
1. RAMP CROSS SECTION TO BE THE SAME AS ADJACENT SIDEWALK.
2. DIMENSIONS ARE SUBJECT TO CHANGE IN FIELD. ALL SLOPES AND DIMENSIONS TO COMPLY WITH A.D.A. REQUIREMENTS.

CURB CUT TYPE A

NOT TO SCALE

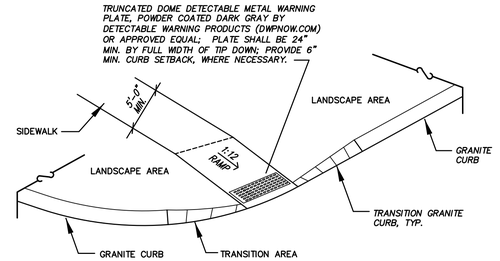

NOTE:
1. RAMP CROSS SECTION TO BE THE SAME AS ADJACENT SIDEWALK.
2. DIMENSIONS ARE SUBJECT TO CHANGE IN FIELD. ALL SLOPES AND DIMENSIONS TO COMPLY WITH A.D.A. REQUIREMENTS.

CURB CUT – TYPE C

NOT TO SCALE

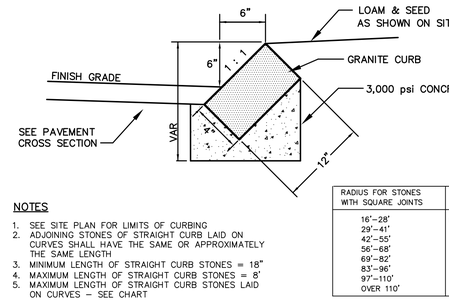

NOTES

1. SEE SITE PLAN FOR LIMITS OF CURBING.
2. ADJOINING STONES OF STRAIGHT CURB LAID ON CURVES SHALL HAVE THE SAME OR APPROXIMATELY THE SAME LENGTH.
3. MINIMUM LENGTH OF STRAIGHT CURB STONES = 18"
4. MAXIMUM LENGTH OF STRAIGHT CURB STONES = 8'
5. MAXIMUM LENGTH OF STRAIGHT CURB STONES LAID ON CURVES – SEE CHART

RADIUS FOR STONES WITH SQUARE JOINTS	MAXIMUM LENGTH
16'–28'	1'–6"
29'–41'	2'
42'–55'	3'
56'–68'	4'
69'–82'	5'
83'–96'	6'
97'–110'	7'
OVER 110'	8'

SLOPE GRANITE CURB

NOT TO SCALE

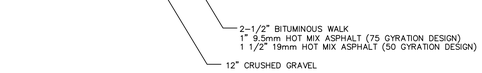

BITUMINOUS PAVEMENT SIDEWALK DETAIL

NOT TO SCALE

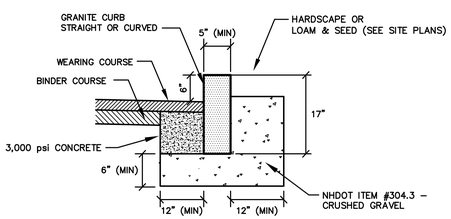

NOTES:

1. SEE PLANS FOR CURB LOCATION.
2. ADJOINING STONES SHALL HAVE THE SAME OR APPROXIMATELY THE SAME LENGTH.
3. MINIMUM LENGTH OF CURB STONES = 3'
4. MAXIMUM LENGTH OF CURB STONES = 10'
5. MAXIMUM LENGTH OF STRAIGHT CURB STONES LAID ON CURVES – SEE CHART.
6. CURB ENDS TO ROUNDED AND BATTERED FACES TO BE CUT WHEN CALLED FOR ON THE PLANS.

RADIUS	MAX. LENGTH
21'	3'
22'–28'	4'
29'–35'	5'
36'–42'	6'
43'–49'	7'
50'–56'	8'
57'–60'	9'
OVER 60'	10'

VERTICAL GRANITE CURB

NOT TO SCALE

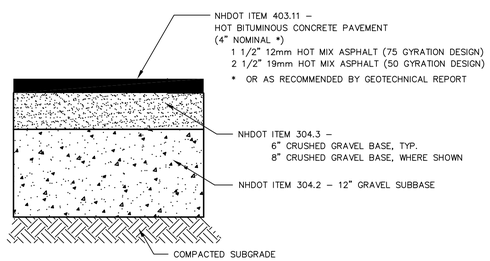

BITUMINOUS PAVEMENT DETAIL

NOT TO SCALE

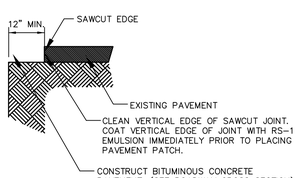

TYPICAL PAVEMENT SAWCUT DETAIL

NOT TO SCALE

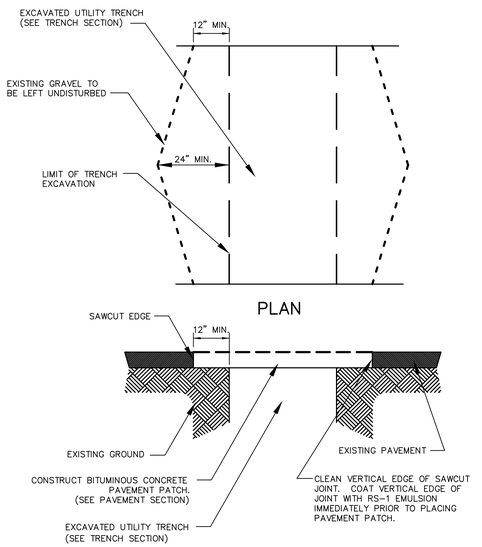

PLAN

SECTION

TYPICAL TRENCH PATCH

NOT TO SCALE

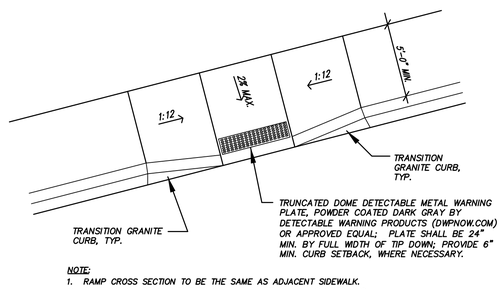

NOTE:
1. RAMP CROSS SECTION TO BE THE SAME AS ADJACENT SIDEWALK.
2. DIMENSIONS ARE SUBJECT TO CHANGE IN FIELD. ALL SLOPES AND DIMENSIONS TO COMPLY WITH A.D.A. REQUIREMENTS.

CURB CUT TYPE D

NOT TO SCALE

FINAL APPROVAL BY DURHAM PLANNING BOARD.
CERTIFIED BY MICHAEL BEHRENDT, TOWN PLANNER
CERTIFIED _____
DATE _____

P4836

ALTUS ENGINEERING, INC.
133 COURT STREET PORTSMOUTH, NH 03801
VOICE: (603) 433-2335
FAX: (603) 433-4194

JEFFREY K. CLIFFORD No. 6524 LICENSED PROFESSIONAL ENGINEER STATE OF NEW HAMPSHIRE

ISSUED FOR:
FINAL TOWN APPROVAL

ISSUE DATE:
MAY 23, 2018

REVISIONS

NO.	DESCRIPTION	BY	DATE
0	INITIAL SUBMISSION	JKC	7/19/17
1	PB RE–SUBMISSION	JKC	10/16/17
2	PB RE–SUBMISSION	JKC	12/05/17
3	100% D.D.	JKC	12/22/17
4	NHDES AoT SUBMISSION	JKC	1/18/18
5	50% C.D.	JKC	2/16/18
6	PERMIT SET	JKC	3/16/18
7	BID SET	JKC	4/02/18
8	100% C.D.	JKC	4/13/18
9	Final Town Approval	JKC	5/23/18

DRAWN BY: RMB
APPROVED BY: JKC
DRAWING FILE: 4836DS.DWG

SCALE: N.T.S.

LAND OWNER – SUBJECT PARCEL:
RIVERWOODS DURHAM
5 WHITE OAK DRIVE
EXETER, NH 03833

APPLICANT:
THE RIVERWOODS GROUP
5 WHITE OAK DRIVE
EXETER, NH 03833

PROJECT:
RIVERWOODS DURHAM
STONE QUARRY DRIVE
DURHAM, NH

TITLE:
DETAIL SHEET

SHEET NUMBER:
C - 6.2

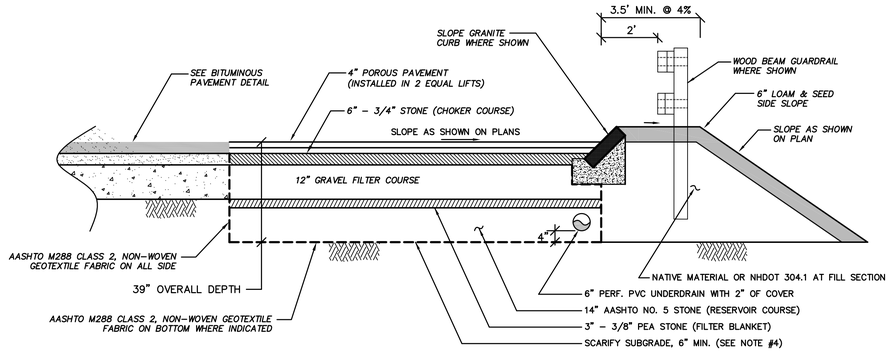

NOTES:

1. *CONTRACTOR SHALL PROVIDE SUBMITTALS FOR POROUS PAVEMENT AS NOTED IN THE SPECIFICATIONS A MINIMUM OF 14-DAYS PRIOR TO COMMENCING CONSTRUCTION.*
2. *CONTRACTOR SHALL NOTIFY ENGINEER A MINIMUM OF 7 DAYS IN ADVANCE OF WORK SO THAT THE ENGINEER CAN OBSERVE INSTALLATION OF POROUS PAVEMENT CROSS SECTION.*
3. *CONTRACTOR TO REMOVE ANY EXISTING BURIED LAYERS OF LOAM OR UNSUITABLE MATERIAL DURING THE EXCAVATION OF THE PARKING AREA AND/OR WHENEVER ENCOUNTERED IN TRENCHES.*
4. *AT AREAS REQUESTED BY ENGINEER, PROOF ROLL PRIOR TO SCARIFYING THE SUBGRADE.*

MATERIAL GRADATIONS

RESERVOIR COURSE		CHOKER COURSE STONE		FILTER BLANKET		GRAVEL FILTER COURSE	
SIEVE SIZE	% PASSING BY WEIGHT	SIEVE SIZE	% PASSING BY WEIGHT	SIEVE SIZE	% PASSING BY WEIGHT	SIEVE SIZE	% PASSING BY WEIGHT
1-1/2"	100	1-1/2"	100	1/2"	100	6"	100
1"	90 - 100	1"	95 - 100	3/8"	85 - 100	# 4	70 - 85
3/4"	20 - 55	1/2"	25 - 60	# 4	10 - 30	# 200	0 - 6
1/2"	0 - 10	# 4	0 - 10	# 8	0 - 10		
3/8"	0 - 5	# 8	0 - 5	# 16	0 - 5		

POROUS PAVEMENT DETAIL

NOT TO SCALE

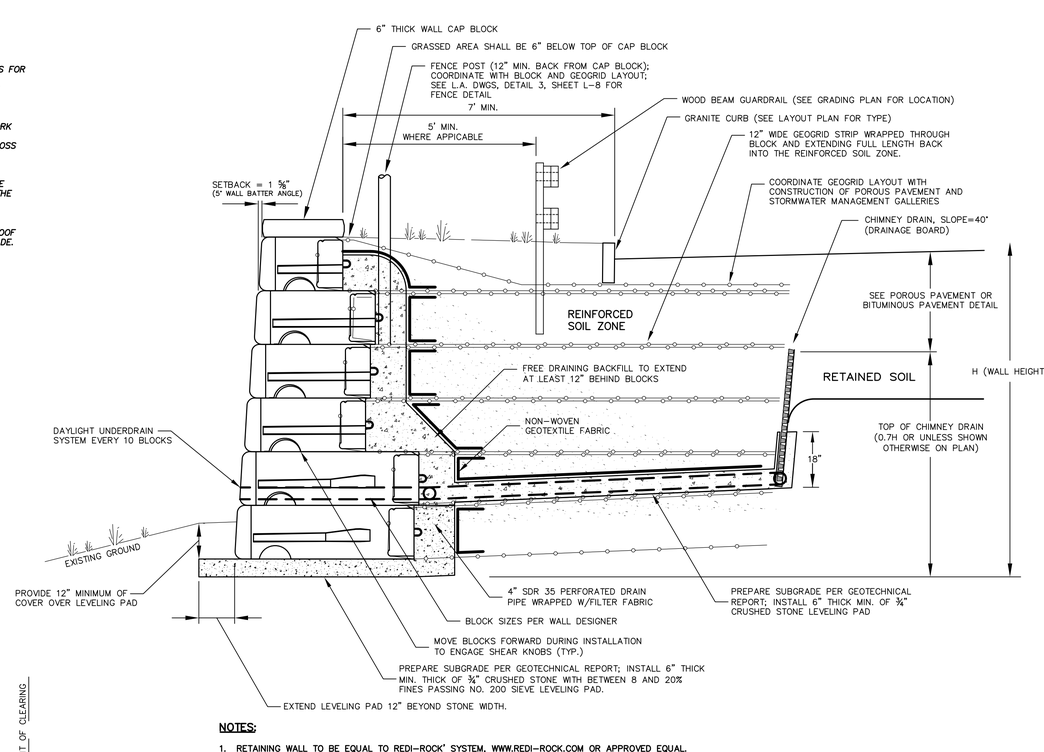

NOTES:

1. RETAINING WALL TO BE EQUAL TO REDI-ROCK' SYSTEM. WWW.REDI-ROCK.COM OR APPROVED EQUAL.
2. INSTALLATION TO BE COMPLETED IN ACCORDANCE WITH MANUFACTURER'S SPECIFICATIONS.
3. WALLS AND OPTIONAL REINFORCEMENT TO DE DESIGNED AND STAMPED BY A PROFESSIONAL ENGINEER LICENSED IN NH. DESIGNER SHALL REFER TO "REPORT OF GEOTECHNICAL EVALUATION FOR RIVERWOODS FACILITY, STONE QUARRY DRIVE, DURHAM, NH", DATED JANUARY 23, 2018.
4. DO NOT SCALE DRAWING.
5. GEOTECHNICAL ENGINEER TO REVIEW THE WALL SHOP DRAWINGS AND THE SUBGRADE.
6. CONSTRUCTION OF WALL SHALL BE COORDINATED WITH CONSTRUCTION OF POROUS PAVEMENT AND STORMWATER MANAGEMENT GALLERIES.

TYPICAL LARGE BLOCK RETAINING WALL DETAIL

NOT TO SCALE

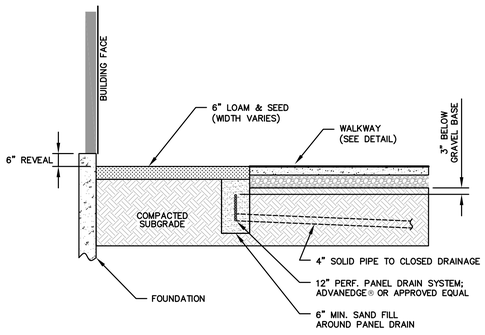

UNDERDRAIN DETAIL

NOT TO SCALE

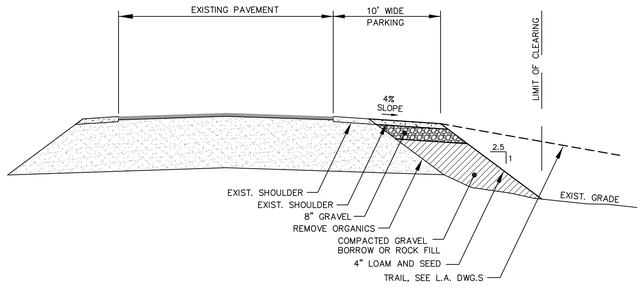

OFF-SITE TRAIL ACCESS PARKING

NOT TO SCALE

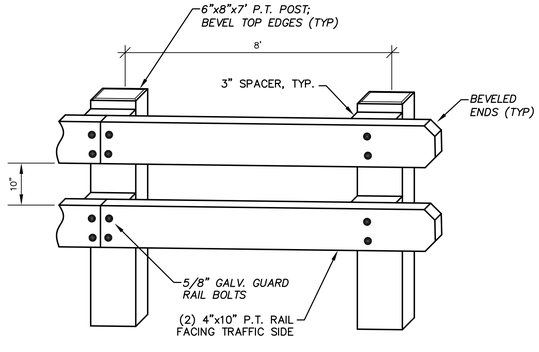

NOTE:

FENCE BY GC/AAA FENCE COMPANY, DOVER, NH, TEL. (800) 660-0833 OR APPROVED EQUAL

WOOD BEAM GUARDRAIL

NOT TO SCALE

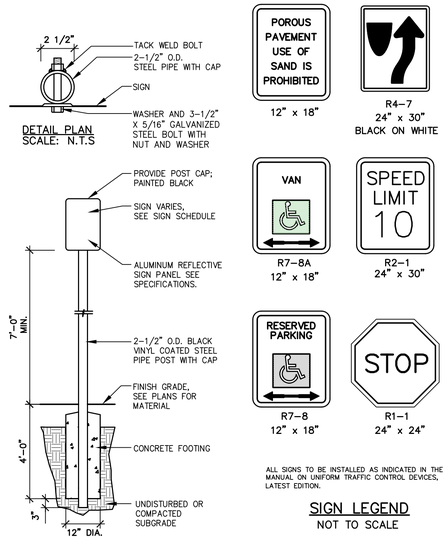

ALL SIGNS TO BE INSTALLED AS INDICATED IN THE MANUAL ON UNIFORM TRAFFIC CONTROL DEVICES, LATEST EDITION.

SIGN LEGEND
NOT TO SCALE

SIGN POST DETAIL

NOT TO SCALE

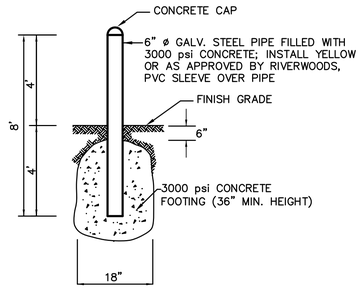

BOLLARD DETAIL

NOT TO SCALE

FINAL APPROVAL BY DURHAM PLANNING BOARD.
CERTIFIED BY MICHAEL BEHRENDT, TOWN PLANNER
CERTIFIED _____
DATE _____

P4836

ALTUS ENGINEERING, INC.
133 COURT STREET PORTSMOUTH, NH 03801
VOICE: (603) 433-2335
FAX: (603) 433-4194

JEFFREY K. CLIFFORD No. 6524 LICENSED PROFESSIONAL ENGINEER STATE OF NEW HAMPSHIRE

ISSUED FOR: *FINAL TOWN APPROVAL*

ISSUE DATE: *MAY 23, 2018*

REVISIONS

NO.	DESCRIPTION	BY	DATE
0	INITIAL SUBMISSION	JKC	7/19/17
1	PB RE-SUBMISSION	JKC	10/16/17
2	PB RE-SUBMISSION	JKC	12/05/17
3	100% D.D.	JKC	12/22/17
4	NHDES AoT SUBMISSION	JKC	1/18/18
5	50% C.D.	JKC	2/16/18
6	PERMIT SET	JKC	3/16/18
7	BID SET	JKC	4/02/18
8	100% C.D.	JKC	4/13/18
9	Final Town Approval	JKC	5/23/18

DRAWN BY: RMB
APPROVED BY: JKC
DRAWING FILE: 4836DS.DWG

SCALE: N.T.S.

LAND OWNER - SUBJECT PARCEL:
RIVERWOODS DURHAM
5 WHITE OAK DRIVE
EXETER, NH 03833

APPLICANT:
THE RIVERWOODS GROUP
5 WHITE OAK DRIVE
EXETER, NH 03833

PROJECT:
RIVERWOODS DURHAM
STONE QUARRY DRIVE
DURHAM, NH

TITLE:
DETAIL SHEET

SHEET NUMBER:
C - 6.3

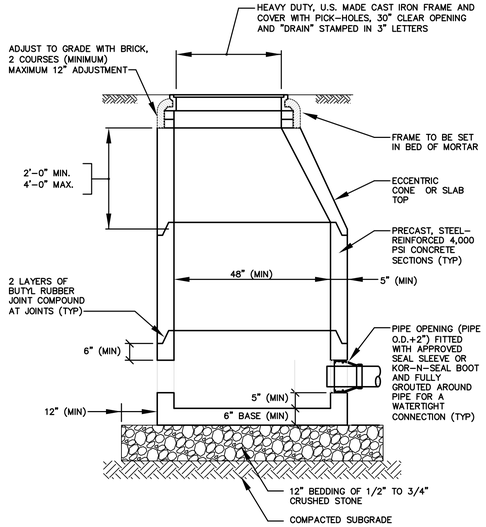

NOTES

1. *ALL SECTIONS SHALL BE CONCRETE CLASS AA (4000 psi).*
2. *CIRCUMFERENTIAL REINFORCEMENT SHALL BE 0.12 SQ.IN. PER LINEAR FT. IN ALL SECTIONS AND SHALL BE PLACED IN THE CENTER THIRD OF THE WALL.*
3. *THE TONGUE OR GROOVE OF THE JOINT SHALL CONTAIN ONE LINE OF CIRCUMFERENTIAL REINFORCEMENT EQUAL TO 0.12 SQ. IN. PER LINEAR FT.*
4. *RISERS OF 1', 2', 3' & 4' CAN BE USED TO REACH DESIRED DEPTH.*
5. *ALL MANHOLE STRUCTURES SHALL BE DESIGNED FOR H20 LOADING.*
6. *USE H-20 LOADING SLAB TOP SECTION IN LIEU OF ECCENTRIC TOP WHERE PIPE INVERT IS WITHIN 4 FT OF GRADE.*
7. *MANHOLE STEPS ARE NOT PERMITTED.*

DRAIN MANHOLE DETAIL

NOT TO SCALE

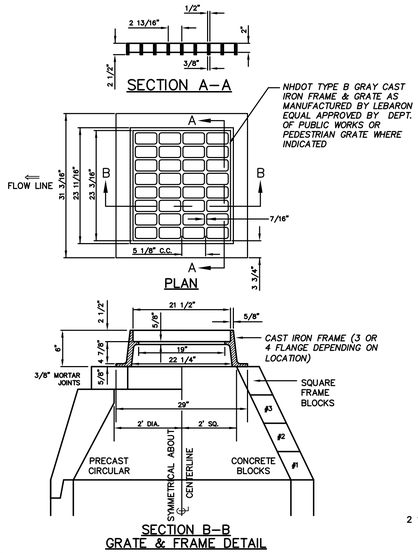

NOTES

1. *ALL SECTIONS SHALL BE CONCRETE CLASS AA (4000 PSI).*
2. *CIRCUMFERENTIAL REINFORCEMENT SHALL BE 0.12 SQ.IN. PER LINEAR FT. IN ALL SECTIONS AND SHALL BE PLACED IN THE CENTER THIRD OF THE WALL.*
3. *THE TONGUE OR GROOVE OF THE JOINT SHALL CONTAIN ONE LINE OF CIRCUMFERENTIAL REINFORCEMENT EQUAL TO 0.12 SQ. IN. PER LINEAR FT.*
4. *RISERS OF 1', 2', 3' & 4' CAN BE USED TO REACH DESIRED DEPTH.*
5. *THE STRUCTURES SHALL BE DESIGNED FOR H20 LOADING.*
6. *USE H20 LOADING SLAB TOP SECTION IN LIEU OF ECCENTRIC TOP WHERE PIPE INVERT IS WITHIN 4' OF FINISH GRADE.*

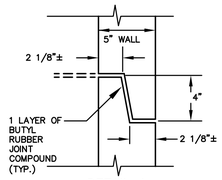

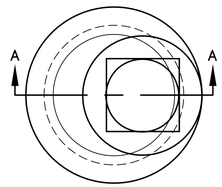

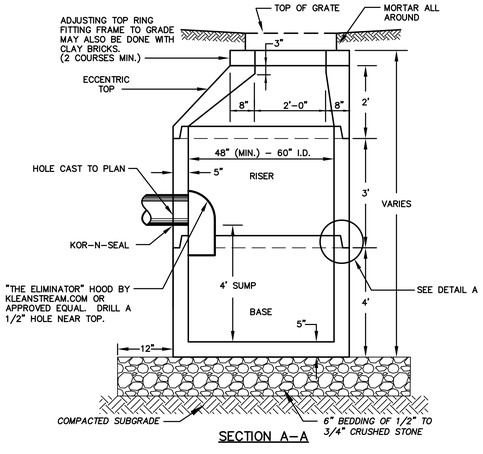

DEEP SUMP CATCH BASIN - TYPE 1

NOT TO SCALE

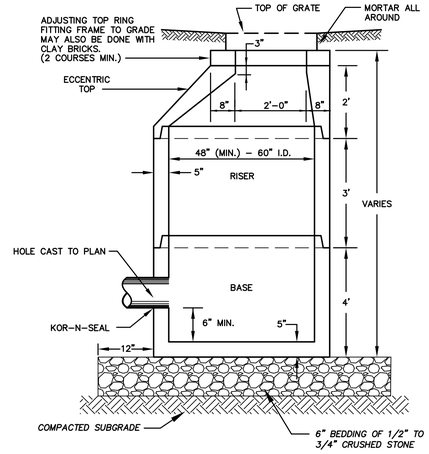

CATCH BASIN - TYPE 2

NOT TO SCALE

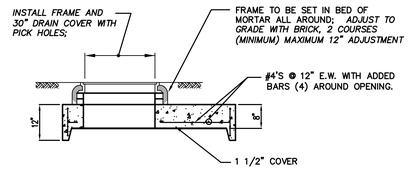

SLAB TOP DETAIL

NOT TO SCALE

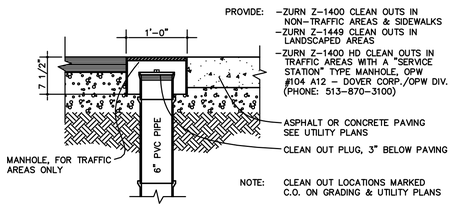

CLEANOUT DETAIL

NOT TO SCALE

NOTES:

1. *INLINE DRAIN TO BE 12" DIAMETER PVC AS MANUFACTURED BY ADS (1-800-821-6710), NDS, INC. (1-800-726-1994) OR APPROVED EQUAL.*
2. *THE CONTRACTOR SHALL INSTALL THE INLINE DRAIN AS PER THE MANUFACTURERS RECOMMENDATIONS AND AS SHOWN IN THE DRAWINGS.*

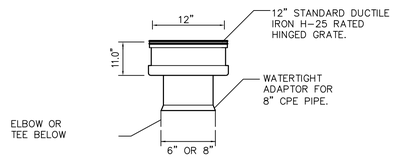

12" AREA DRAIN AND GRATE

NOT TO SCALE

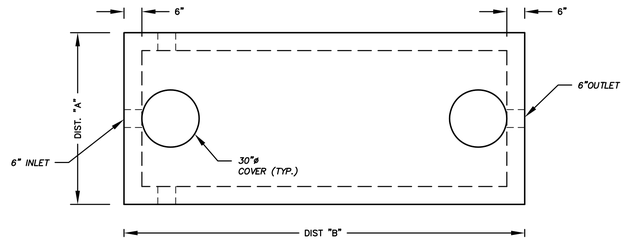

NOTE:
SIZE OF UNDERGROUND SAND FILTERS LISTED BELOW IS PRELIMINARY AND SUBJECT TO REGULATORY REVIEW AND APPROVAL BY NHDES ALTERATION OF TERRAIN PROGRAM

SMG ID.	PUSF ID.	DIST. A MIN.	DIST. B MIN.	DIST. C MIN.
A	#1A	5'	9'	5'-8"
B	#9A	10'	17'	5'-8"
C	#103	8'	17'	5'-8"
E	#104	7'	15'	5'-8"

FILTER MEDIA

COMPONENT	% PASSING BY VOLUME	SEIVE NO.	% PASSING BY WEIGHT
MODERATELY FINE SHREDDED BARK OR WOOD FIBER MULCH	20 - 30	200	<5
LOAMY COURSE SAND	70 - 80	10	85 - 100
		20	70 - 100
		60	15 - 40
		200	8 - 15

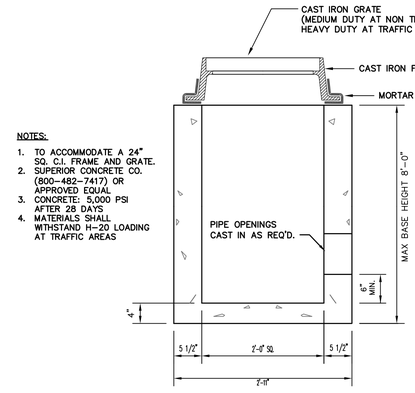

DROP INLET STRUCTURE

NOT TO SCALE

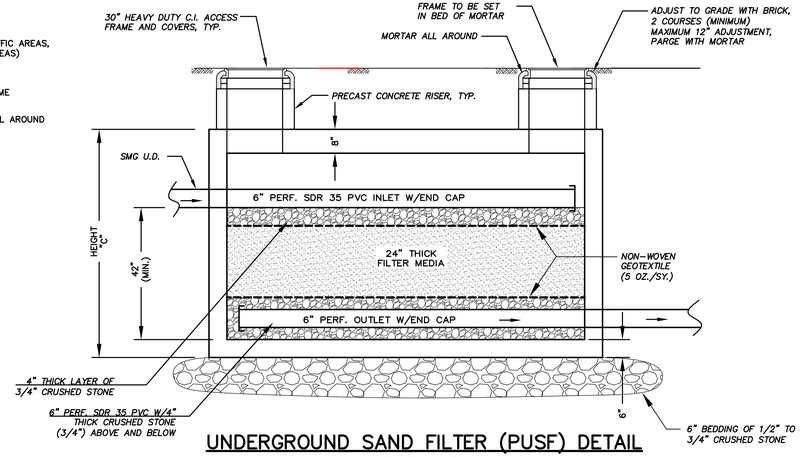

UNDERGROUND SAND FILTER (PUSF) DETAIL

NOT TO SCALE

FINAL APPROVAL BY DURHAM PLANNING BOARD.
CERTIFIED BY MICHAEL BEHRENDT, TOWN PLANNER
CERTIFIED _____
DATE _____

P4836

ALTUS ENGINEERING, INC.
133 COURT STREET PORTSMOUTH, NH 03801
VOICE: (603) 433-2335
FAX: (603) 433-4194

STATE OF NEW HAMPSHIRE
JEFFREY K. CLIFFORD No. 6524 LICENSED PROFESSIONAL ENGINEER

ISSUED FOR:
FINAL TOWN APPROVAL

ISSUE DATE:
MAY 23, 2018

REVISIONS

NO.	DESCRIPTION	BY	DATE
0	INITIAL SUBMISSION	JKC	7/19/17
1	PB RE-SUBMISSION	JKC	10/16/17
2	PB RE-SUBMISSION	JKC	12/05/17
3	100% D.D.	JKC	12/22/17
4	NHDES AoT SUBMISSION	JKC	1/18/18
5	50% C.D.	JKC	2/16/18
6	PERMIT SET	JKC	3/16/18
7	BID SET	JKC	4/02/18
8	100% C.D.	JKC	4/13/18
9	Final Town Approval	JKC	5/23/18

DRAWN BY: RMB
APPROVED BY: JKC
DRAWING FILE: 4836DS.DWG

SCALE: N.T.S.

LAND OWNER - SUBJECT PARCEL:
RIVERWOODS DURHAM
5 WHITE OAK DRIVE
EXETER, NH 03833

APPLICANT:
THE RIVERWOODS GROUP
5 WHITE OAK DRIVE
EXETER, NH 03833

PROJECT:
RIVERWOODS DURHAM
STONE QUARRY DRIVE
DURHAM, NH

TITLE:
DETAIL SHEET

SHEET NUMBER:
C - 6.4

STANDARD TRENCH NOTES:

1. ORDERED EXCAVATION OF UNSUITABLE MATERIAL BELOW GRADE: BACKFILL AS STATED IN THE TECHNICAL SPECIFICATIONS OR AS SHOWN OF THE DRAWING

2. BEDDING: SCREENED GRAVEL AND/OR CRUSHED STONE FREE FROM CLAY, LOAM, ORGANIC MATTER AND MEETING ASTM C33, STONE SIZE NO. 67.
   - 100% PASSING 1 INCH SCREEN
   - 90 – 100% PASSING 3/4 INCH SCREEN
   - 20 – 55% PASSING 3/8 INCH SCREEN
   - 0 – 10% PASSING #4 SIEVE
   - 0 – 5% PASSING #8 SIEVE

   WHERE ORDERED BY THE ENGINEER TO STABILIZE THE BASE, SCREENED GRAVEL OR CRUSHED STONE 1–1/2 INCH TO 1/2 INCH SHALL BE USED.

3. SAND BLANKET: CLEAN SAND FREE FROM ORGANIC MATTER, SO GRADED THAT 90 – 100% PASSES 1/2 INCH SIEVE AND NOT MORE THAN 15% WILL PASS A #200 SIEVE. BLANKET MAY BE OMITTED FOR CAST–IRON, DUCTILE IRON, AND REINFORCED CONCRETE PIPE PROVIDED HOWEVER, THAT NO STONE LARGER THAN 2" IS IN CONTACT WITH THE PIPE.

4. SUITABLE MATERIAL: IN ROADS, ROAD SHOULDERS, WALKWAYS AND TRAVELED WAYS, SUITABLE MATERIAL FOR TRENCH BACKFILL SHALL BE THE NATURAL MATERIAL EXCAVATED DURING THE COURSE OF CONSTRUCTION, BUT SHALL EXCLUDE DEBRIS; PIECES OF PAVEMENT; ORGANIC MATTER; TOP SOIL; ALL WET OR SOFT MUCK, PEAT, OR CLAY; ALL EXCAVATED LEDGE MATERIAL; ALL ROCKS OVER 6 INCHES IN LARGEST DIMENSION; AND ANY MATERIAL WHICH, AS DETERMINED BY THE ENGINEER, WILL NOT PROVIDE SUFFICIENT SUPPORT OR MAINTAIN THE COMPLETED CONSTRUCTION IN A STABLE CONDITION.

   IN CROSS COUNTRY CONSTRUCTION, SUITABLE MATERIAL SHALL BE AS DESCRIBED ABOVE, EXCEPT THAT THE ENGINEER MAY PERMIT THE USE OF TOP SOIL, LOAM, MUCK, OR PEAT, IF SATISFIED THAT THE COMPLETED CONSTRUCTION WILL BE ENTIRELY STABLE AND PROVIDED THAT EASY ACCESS TO THE SEWER, FOR MAINTENANCE AND POSSIBLE RECONSTRUCTION, WILL BE PRESERVED.

5. BASE COURSE AND PAVEMENT SHALL MEET THE REQUIREMENTS OF THE NEW HAMPSHIRE DEPARTMENT OF TRANSPORTATION'S LATEST EDITION OF THE STANDARD SPECIFICATIONS FOR HIGHWAYS AND BRIDGES – DIVISIONS 300 AND 400 RESPECTIVELY.

6. SHEETING, IF REQUIRED: WHERE SHEETING IS PLACED ALONGSIDE THE PIPE AND EXTENDS BELOW MID–DIAMETER, IT SHALL BE CUT OFF AND LEFT IN PLACE TO AN ELEVATION 1 FOOT ABOVE THE TOP OF PIPE. WHERE SHEETING IS ORDERED BY THE ENGINEER TO BE LEFT IN PLACE, IT SHALL BE CUT OFF AT LEAST 3 FEET BELOW FINISHED GRADE, BUT NOT LESS THAT 1 FOOT ABOVE THE TOP OF THE PIPE.

7. W = MAXIMUM ALLOWABLE TRENCH WIDTH TO A PLANE 12 INCHES ABOVE THE PIPE. FOR PIPES 15 INCHES NOMINAL DIAMETER OR LESS, W SHALL BE NO MORE THAN 36 INCHES. FOR PIPES GREATER THAN 15 INCHES IN NOMINAL DIAMETER, W SHALL BE 24 INCHES PLUS PIPE OUTSIDE DIAMETER (O.D.) ALSO, W SHALL BE THE PAYMENT WIDTH FOR LEDGE EXCAVATION AND FOR ORDERED EXCAVATION BELOW GRADE.

8. FOR CROSS COUNTRY CONSTRUCTION, BACKFILL OR FILL SHALL BE MOUNDED TO A HEIGHT OF 6 INCHES ABOVE THE ORIGINAL GROUND SURFACE.

9. CONCRETE FOR ENCASEMENT SHALL CONFORM TO THE NEW HAMPSHIRE DEPARTMENT OF PUBLIC WORKS AND HIGHWAYS STANDARD SPECIFICATION REQUIREMENTS FOR CLASS A (3000#) CONCRETE AS FOLLOWS:
   - CEMENT: 6.0 BAGS PER CUBIC YARD
   - WATER: 5.75 GALLONS PER BAG CEMENT
   - MAXIMUM SIZE OF AGGREGATE: 1 INCH

   CONCRETE ENCASEMENT IS NOT ALLOWED FOR PVC PIPE.

10. CONCRETE FULL ENCASEMENT: IF FULL ENCASEMENT IS UTILIZED, DEPTH OF CONCRETE BELOW PIPE SHALL BE 1/4 I.D. (4" MINIMUM). BLOCK SUPPORT SHALL BE SOLID CONCRETE BLOCKS.

11. NEW HAMPSHIRE DEPARTMENT OF ENVIRONMENTAL SERVICES DESIGN STANDARDS REQUIRE TEN FEET (10') SEPARATION BETWEEN WATER AND SEWER. REFER TO TOWN'S STANDARD SPECIFICATIONS FOR METHODS OF PROTECTION IN AREAS THAT CANNOT MEET THESE REQUIREMENTS.

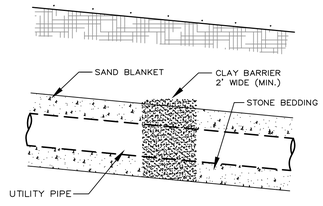

TRENCH DAM
NOT TO SCALE

MANHOLE NOTES:

1. IT IS THE INTENTION OF THE NHDES THAT THE MANHOLE, INCLUDING ALL COMPONENT PARTS, HAVE ADEQUATE SPACE, STRENGTH AND LEAKPROOF QUALITIES CONSIDERED NECESSARY BY THE COMMISSION FOR THE INTENDED SERVICE. SPACE REQUIREMENTS AND CONFIGURATIONS, SHALL BE AS SHOWN ON THE DRAWING. MANHOLES MAY BE AN ASSEMBLY OF PRECAST SECTIONS, WITH OR WITHOUT STEEL REINFORCEMENT, WITH ADEQUATE JOINTING, OR CONCRETE CAST MONOLITHICALLY IN PLACE WITH OR WITHOUT REINFORCEMENT IN ANY APPROVED MANHOLE. THE COMPLETE STRUCTURE SHALL BE OF SUCH MATERIAL AND QUALITY AS TO WITHSTAND LOADS OF 8 TONS (H–20 LOADING) WITHOUT FAILURE AND PREVENT LEAKAGE IN EXCESS OF ONE GALLON PER DAY PER VERTICAL FOOT OF MAN–HOLE CONTINUOUSLY FOR THE LIFE OF THE STRUCTURE, A PERIOD GENERALLY IN EXCESS OF 25 YEARS IS TO BE UNDERSTOOD IN BOTH CASES.

2. BARRELS AND CONE SECTIONS SHALL BE PRECAST REINFORCED.

3. PRECAST CONCRETE BARREL SECTIONS, CONES AND BASES SHALL CONFORM TO ASTM C478.

4. LEAKAGE TEST SHALL BE PERFORMED IN ACCORDANCE WITH THE TOWN'S STANDARD SPECIFICATIONS AND WITH NHDES Env–Wq 704.17.

5. INVERTS AND SHELVES MANHOLES SHALL HAVE A BRICK PAVED SHELF AND INVERT CONSTRUCTED TO CONFORM TO THE SIZE OF PIPE AND FLOW AT CHANGES IN DIRECTION. THE INVERTS SHALL BE LAID OUT IN CURVES, OF THE LONGEST RADIUS POSSIBLE TANGENT TO THE CENTER LINE OF THE SEWER PIPES. SHELVES SHALL BE CONSTRUCTED TO THE ELEVATION OF THE HIGHEST PIPE CROWN AND SLOPE TO DRAIN TOWARD THE FLOWING THROUGH CHANNEL. UNDERLAYMENT OF INVERT AND SHELF SHALL CONSIST OF BRICK MASONRY. BRICK MASONRY SHALL CONFORM WITH ASTM C32.

6. MORTAR MORTAR USED FOR MANHOLE CONSTRUCTION SHALL CONFORM WITH NHDES Env–Wq 704.13.

7. FRAMES AND COVERS MANHOLE FRAMES AND COVERS SHALL CONFORM WITH ASTM A48/48M, BE OF HEAVY DUTY DESIGN AND PROVIDE A 30–INCH CLEAR OPENING. A 3–INCH (MINIMUM HEIGHT) LETTER "S" FOR SEWERS OR "D" FOR DRAINS SHALL BE PLAINLY CAST INTO THE CENTER OF EACH COVER.

8. BEDDING SCREENED GRAVEL AND/OR CRUSHED STONE FREE FROM CLAY, LOAM, ORGANIC MATTER AND MEETING ASTM C33.
   - 100% PASSING 1 INCH SCREEN
   - 90–100% PASSING 3/4 INCH SCREEN
   - 20– 55% PASSING 3/8 INCH SCREEN
   - 0–10% PASSING #4 SIEVE
   - 0–5% PASSING #8 SIEVE

   WHERE ORDERED BY THE ENGINEER TO STABILIZE THE BASE, SCREENED GRAVEL OR CRUSHED STONE 1–1/2" TO 1/2" SHALL BE USED.

9. CONCRETE FOR DROP SUPPORT SHALL CONFORM TO THE REQUIREMENT FOR CLASS A (3000 LBS.) CONCRETE OF THE NEW HAMPSHIRE DEPARTMENT OF TRANSPORTATION STANDARD SPECIFICATIONS AS FOLLOWS:
   - CEMENT 6.0 BAGS PER CUBIC YARD
   - WATER 5.75 GALLONS PER BAG CEMENT
   - MAXIMUM SIZE OF AGGREGATE 1 INCH 9.

10. FLEXIBLE JOINT A FLEXIBLE JOINT SHALL BE PROVIDED WITHIN THE FOLLOWING DISTANCES:
    - PVC PIPE – 60"
    - RCP & CI PIPE – ALL SIZES – 48"
    - AC & VC PIPE – UP THROUGH 12" DIAMETER – 18"
    - AC & VC PIPE – LARGER THAN 12" DIAMETER – 36"

11. SHALLOW MANHOLE IN LIEU OF A CONE SECTION, WHEN MANHOLE DEPTH IS LESS THAN 6 FEET, A REINFORCED CONCRETE SLAB COVER MAY BE USED HAVING AN ECCENTRIC ENTRANCE OPENING AND CAPABLE OF SUPPORTING H–20 LOADS.

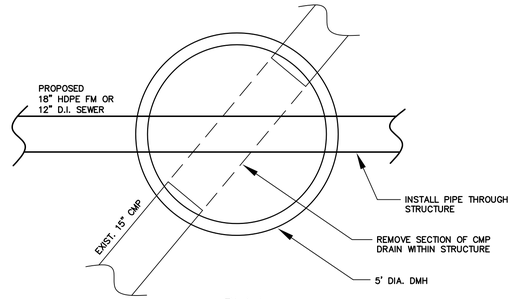

PLAN

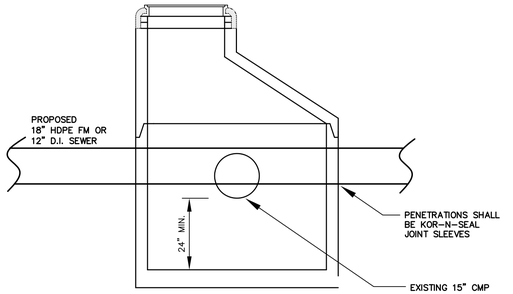

SECTION

CONFLICT MANHOLE DETAIL
NOT TO SCALE

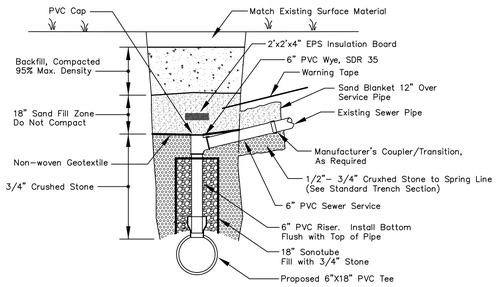

SEWER SERVICE CHIMNEY DETAIL
NOT TO SCALE

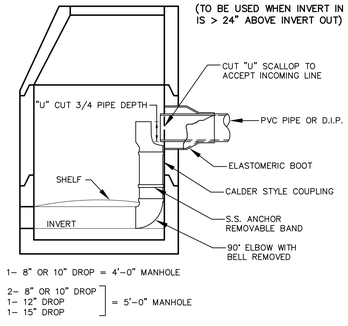

DROP MANHOLE
NOT TO SCALE

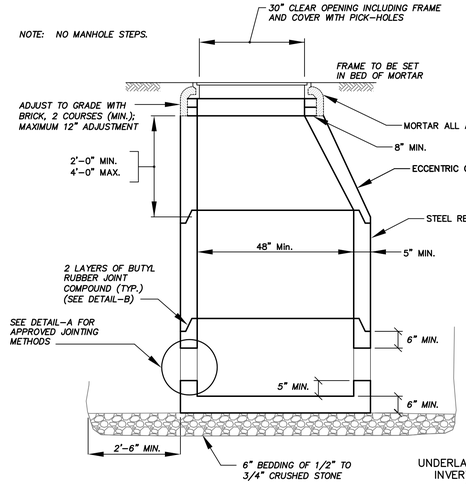

TYPICAL SECTION

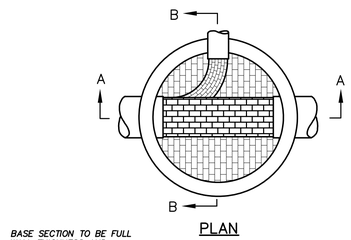

PLAN

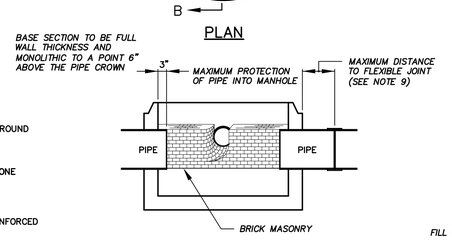

SECTION A–A

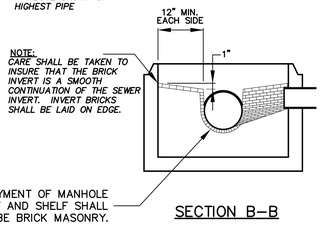

SECTION B–B

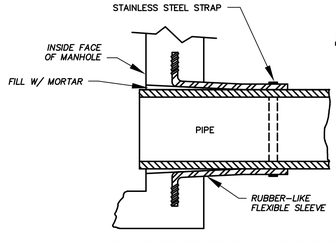

LOCK–JOINT FLEXIBLE MANHOLE SLEEVE
(OR EQUAL)

NOTE: ALL GASKETS, SEALANTS, MORTAR, ETC. SHALL BE INSTALLED IN ACCORDANCE WITH MANUFACTURERS WRITTEN INSTRUCTIONS.

DETAIL–A

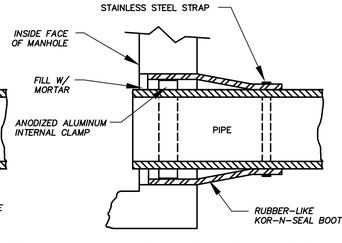

KOR–N–SEAL JOINT SLEEVE
(OR EQUAL)

NOTE: ALL GASKETS, SEALANTS, MORTAR, ETC. SHALL BE INSTALLED IN ACCORDANCE WITH MANUFACTURERS WRITTEN INSTRUCTIONS.

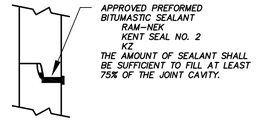

BITUMASTIC

NOTE: ALL GASKETS, SEALANTS, MORTAR, ETC. SHALL BE INSTALLED IN ACCORDANCE WITH MANUFACTURERS WRITTEN INSTRUCTIONS.

DETAIL–B
(APPROVED MANHOLE SECTION JOINTING METHODS)

SEWER MANHOLE DETAILS
NOT TO SCALE

FINAL APPROVAL BY DURHAM PLANNING BOARD.
CERTIFIED BY MICHAEL BEHRENDT, TOWN PLANNER
CERTIFIED _____
DATE _____

SEWER PIPE NOTES:

1. PVC PIPE: PVC PIPE SHALL CONFORM WITH ASTM D3034 AND ASTM D2412.
2. PVC PIPE JOINTS: PVC PIPE JOINTS SHALL CONFORM WITH ASTM D3212.
3. GRAVITY PIPE TESTING: GRAVITY SEWER PIPES SHALL BE TESTED IN ACCORDANCE WITH NHDES Env–Wq 704.06.
4. FORCE MAIN AND PRESSURE PIPE: FORCE MAIN AND PRESSURE PIPE USED IN GRAVITY SEWER CONSTRUCTION SHALL CONFORM WITH:
   - 4.A. ASTM D2241 OR ASTM D1785 FOR PVC PIPE
   - 4.B. ASTM D3035 FOR HDPE PIPE
5. FORCE MAIN TESTING: FORCE MAIN AND PRESSURE PIPE USED FOR GRAVITY SEWER SHALL BE TESTED IN ACCORDANCE WITH NHDES Env–Wq 704.09.

ALTUS ENGINEERING, INC.
133 COURT STREET PORTSMOUTH, NH 03801
VOICE: (603) 433–2335
FAX: (603) 433–4194

STATE OF NEW HAMPSHIRE
JEFFREY K. CLIFFORD No. 8524 LICENSED PROFESSIONAL ENGINEER

ISSUED FOR:
FINAL TOWN APPROVAL

ISSUE DATE:
MAY 23, 2018

REVISIONS

NO.	DESCRIPTION	BY	DATE
0	INITIAL SUBMISSION	JKC	7/19/17
1	PB RE–SUBMISSION	JKC	10/16/17
2	PB RE–SUBMISSION	JKC	12/05/17
3	100% D.D.	JKC	12/22/17
4	NHDES AoT SUBMISSION	JKC	1/18/18
5	50% C.D.	JKC	2/16/18
6	PERMIT SET	JKC	3/16/18
7	BID SET	JKC	4/02/18
8	100% C.D.	JKC	4/13/18
9	NHDES WWE REVIEW	JKC	4/13/18
10	ADDENDUM 1	JKC	4/24/18
11	FINAL TOWN APPROVAL	JKC	5/23/18

DRAWN BY: RMB
APPROVED BY: JKC
DRAWING FILE: 4836DS.DWG

SCALE: N.T.S.

LAND OWNER – SUBJECT PARCEL:
ROCKINGHAM PROPERTIES 1, LTD
P.O. BOX 423
BELMONT, MA 02178

APPLICANT:
THE RIVERWOODS GROUP
5 WHITE OAK DRIVE
EXETER, NH 03833

PROJECT:
RIVERWOODS DURHAM
STONE QUARRY DRIVE
DURHAM, NH

TITLE:
SEWER DETAIL SHEET

SHEET NUMBER:
C - 6.5

P4836

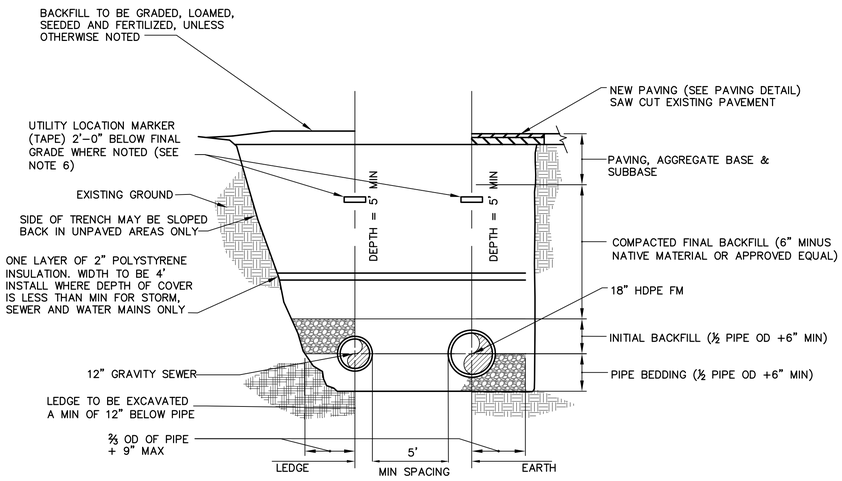

NOTES:
1. ALL EXCAVATION MUST MEET OSHA STANDARDS.
2. INSTALL 3-FOOT LONG IMPERVIOUS MATERIAL DAM IN BEDDING/INITIAL BACKFILL MATERIAL EVERY 100-FEET AND WHERE SHOWN ON PLANS TO PREVENT TRENCH GROUNDWATER FROM BEING CHANNELED ALONG BEDDING/INITIAL BACKFILL.
3. PIPE SPACING AS NOTED.
4. UTILITY LOCATION TAPE TO BE INSTALLED ALONG LENGTH OF PIPE.

TYPICAL PIPE TRENCH

NOT TO SCALE

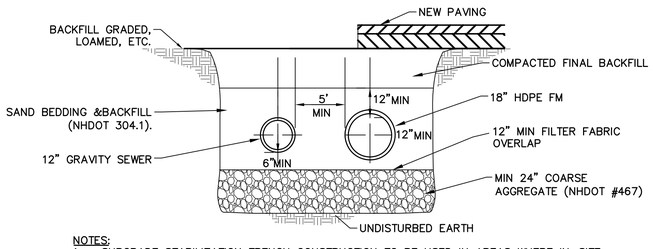

NOTES:
1. SUBGRADE STABILIZATION TRENCH CONSTRUCTION TO BE USED IN AREAS WHERE IN-SITE MATERIAL IS DEEMED UNSTABLE BY THE ENGINEER OR IN AREAS INDICATED ON THE DRAWINGS.
2. EXCAVATION TO BE COMPLETED WITHOUT DISTURBING BOTTOM OF TRENCH.

SUBGRADE STABILIZATION – PIPE TRENCH

NOT TO SCALE

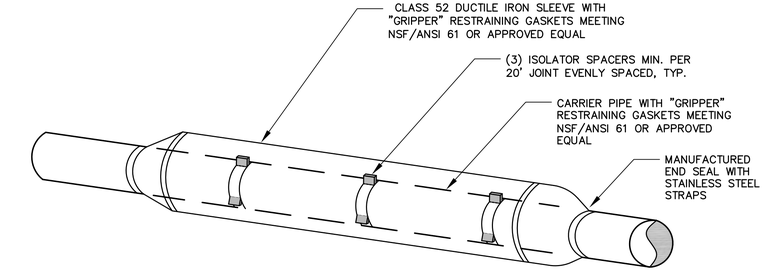

SEWER AND WATER SLEEVE DETAIL

NOT TO SCALE

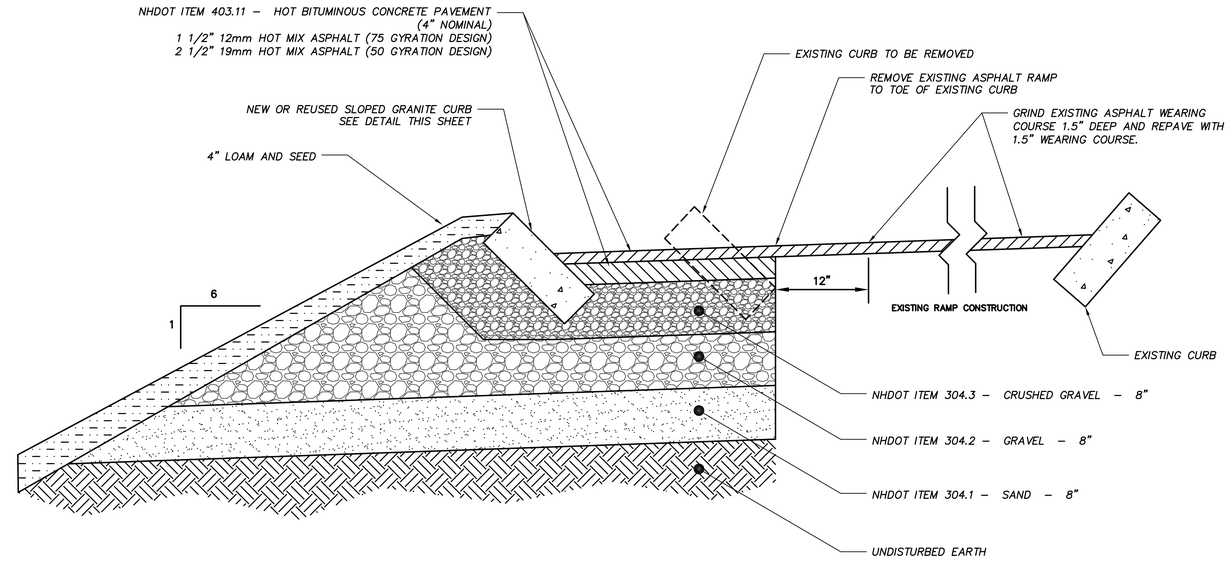

RAMP WIDENING DETAIL

NOT TO SCALE

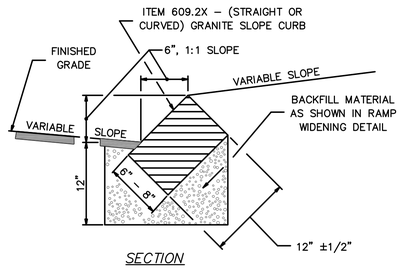

MINIMUM LENGTH OF STRAIGHT CURB STONES = 18"
MAXIMUM LENGTH OF STRAIGHT CURB STONES = 8'
MAXIMUM LENGTH OF STRAIGHT CURB STONES LAID ON CURVES – SEE CHART

RADIUS FOR STONES WITH SQUARE JOINTS	MAXIMUM LENGTH
<2'	USE CURVED CURB
2' – 15'	USE RADIAL JOINTS
16' – 28'	1'-6"
29' – 41'	2'
42' – 55'	3'
56' – 68'	4'
69' – 82'	5'
83' – 96'	6'
97' – 110'	7'
OVER 110'	8'

NOTE: ADJOINING STONES SHALL HAVE THE SAME OR APPROXIMATELY THE SAME LENGTH.

SLOPED GRANITE CURB DETAIL

NOT TO SCALE

FINAL APPROVAL BY DURHAM PLANNING BOARD.
CERTIFIED BY MICHAEL BEHRENDT, TOWN PLANNER
CERTIFIED _____
DATE _____

ALTUS ENGINEERING, INC.
133 COURT STREET PORTSMOUTH, NH 03801
VOICE: (603) 433-2335
FAX: (603) 433-4194

STATE OF NEW HAMPSHIRE – JEFFREY K. CLIFFORD No. 6524 – LICENSED PROFESSIONAL ENGINEER

ISSUED FOR: FINAL TOWN APPROVAL

ISSUE DATE: MAY 23, 2018

REVISIONS

NO.	DESCRIPTION	BY	DATE
0	INITIAL SUBMISSION	JKC	7/19/17
1	PB RE-SUBMISSION	JKC	10/16/17
2	PB RE-SUBMISSION	JKC	12/05/17
3	100% D.D.	JKC	12/22/17
4	NHDES AoT SUBMISSION	JKC	1/18/18
5	50% C.D.	JKC	2/16/18
6	PERMIT SET	JKC	3/16/18
7	BID SET	JKC	4/02/18
8	100% C.D.	JKC	4/13/18
9	ADDENDUM 1	JKC	4/24/18
10	NHDOT EXCAV. PERMIT	JKC	4/26/18
11	NHDOT EXCAV. PERMIT	JKC	5/01/18
12	FINAL TOWN APPROVAL	JKC	5/23/18

DRAWN BY: RMB
APPROVED BY: JKC
DRAWING FILE: 4836DS.DWG

SCALE: N.T.S.

LAND OWNER – SUBJECT PARCEL:
ROCKINGHAM PROPERTIES 1, LTD
P.O. BOX 423
BELMONT, MA 02178

APPLICANT:
THE RIVERWOODS GROUP
5 WHITE OAK DRIVE
EXETER, NH 03833

PROJECT:
RIVERWOODS DURHAM
STONE QUARRY DRIVE
DURHAM, NH

TITLE:
SEWER DETAIL SHEET

SHEET NUMBER:
C - 6.6

P4836

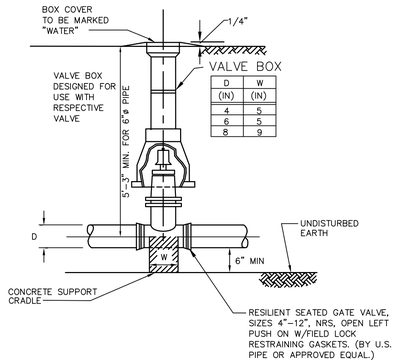

D (IN)	W (IN)
4	5
6	5
8	9

WATER VALVE DETAIL

NOT TO SCALE

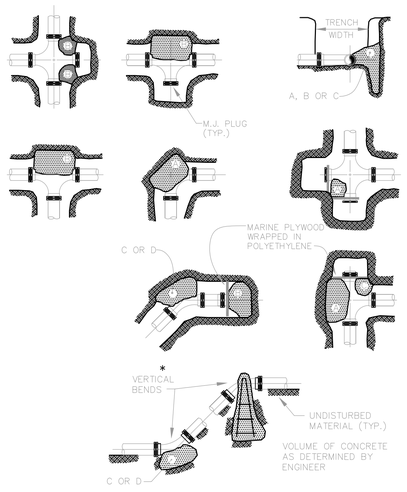

TEST PRESSURE = 150 psi	SQUARE FEET OF CONCRETE THRUST BLOCKING BEARING ON UNDISTURBED MATERIAL					
	REACTION TYPE	PIPE SIZE				
		4"	6"	8"	10"	12"
	A 90°	0.89	2.19	3.82	11.14	17.24
	B 180°	0.65	1.55	2.78	8.38	12.00
	C 45°	0.48	1.19	2.12	6.02	9.32
	D 22-1/2°	0.25	0.60	1.06	3.08	4.74
	E 11-1/4°	0.13	0.30	0.54	1.54	2.38

NOTES:

1. POUR THRUST BLOCKS AGAINST UNDISTURBED MATERIAL. WHERE TRENCH WALL HAS BEEN DISTURBED, EXCAVATE LOOSE MATERIAL AND EXTEND THRUST BLOCK TO UNDISTURBED MATERIAL. NO JOINTS SHALL BE COVERED WITH CONCRETE.
2. ON BENDS AND TEES, EXTEND THRUST BLOCKS FULL LENGTH OF FITTING.
3. PLACE BOARD IN FRONT OF ALL PLUGS BEFORE POURING THRUST BLOCKS.
4. WHERE M.J. PIPE IS USED, M.J. PLUG WITH RETAINER GLAND MAY BE SUBSTITUTED FOR END BLOCKINGS.
5. POLYETHYLENE (6 MIL) SHALL BE PLACED AROUND FITTINGS PRIOR TO CONCRETE PLACEMENT.

THRUST BLOCK DETAIL

NOT TO SCALE

NOTES:

1. HYDRANT INSTALLATION AND OPERATION TO CONFORM TO REGULATIONS OF TOWN OF DURHAM WATER AND FIRE DEPARTMENTS.
2. GATE VALVES TO OPEN XXXX.
3. DRAIN PORTS SHALL BE PLUGGED.

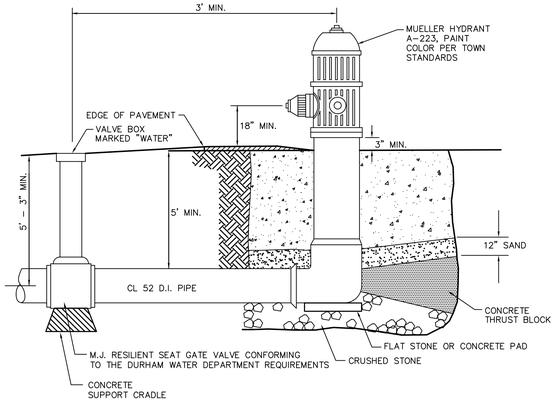

FIRE HYDRANT
(DURHAM HYDRANT STANDARD)

NOT TO SCALE

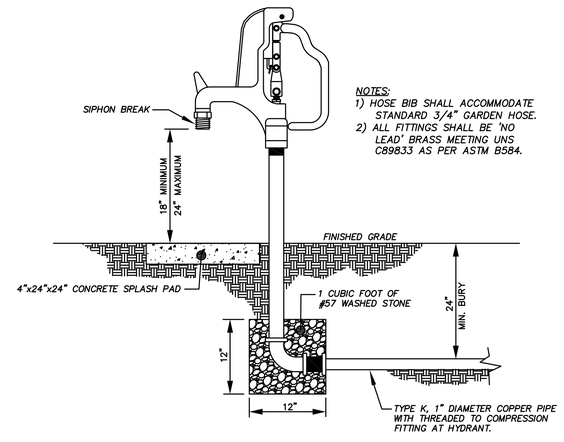

NOTES:
1) HOSE BIB SHALL ACCOMMODATE STANDARD 3/4" GARDEN HOSE.
2) ALL FITTINGS SHALL BE 'NO LEAD' BRASS MEETING UNS C89833 AS PER ASTM B584.

YARD HDRANT DETAIL (NON-FREEZE)

NOT TO SCALE

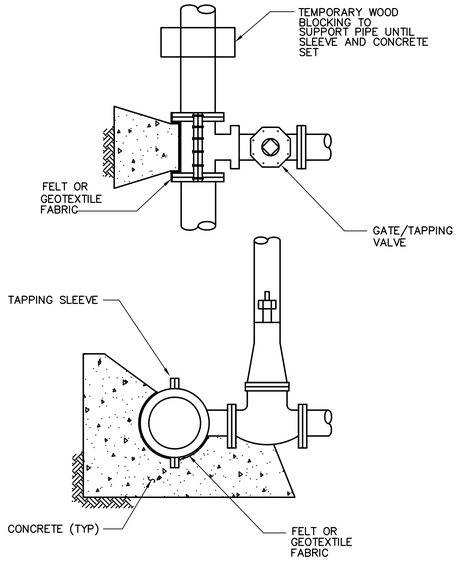

TAPPING SLEEVE AND VALVE ASSEMBLY

NOT TO SCALE

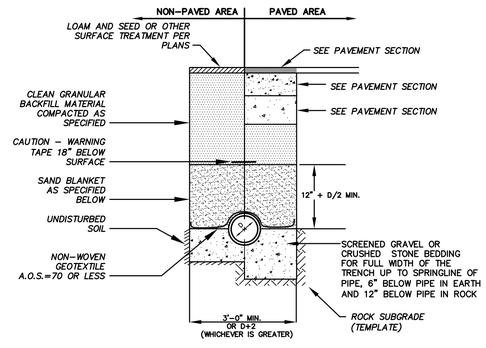

BACKFILL MATERIAL BELOW PAVED OR CONCRETE AREAS, BEDDING MATERIAL, AND SAND BLANKET SHALL BE COMPACTED TO NOT LESS THAN 95% OF AASHTO T 99, METHOD C. SUITABLE BACKFILL MATERIAL BELOW LOAM AREAS SHALL BE COMPACTED TO NOT LESS THAN 90% OF AASHTO T 99, METHOD C.

SAND BLANKET/BARRIER	
SIEVE SIZE	% FINER BY WEIGHT
1/2"	90 - 100
200	0 - 15

SCREENED GRAVEL OR CRUSHED STONE BEDDING	
SIEVE SIZE	% PASSING BY WEIGHT
1"	100
3/4"	90 - 100
3/8"	20 - 55
# 4	0 - 10
# 8	0 - 5

* EQUIVALENT TO STANDARD STONE SIZE #67 - SECTION 703 OF NHDOT STANDARD SPECIFICATIONS

UTILITY TRENCH SECTION

NOT TO SCALE

FINAL APPROVAL BY DURHAM PLANNING BOARD.
CERTIFIED BY MICHAEL BEHRENDT, TOWN PLANNER
CERTIFIED _____
DATE _____

P4836

ALTUS ENGINEERING, INC.
133 COURT STREET PORTSMOUTH, NH 03801
VOICE: (603) 433-2335
FAX: (603) 433-4194

STATE OF NEW HAMPSHIRE – JEFFREY K. CLIFFORD No. 6524 LICENSED PROFESSIONAL ENGINEER

ISSUED FOR:
FINAL TOWN APPROVAL

ISSUE DATE:
MAY 23, 2018

REVISIONS

NO.	DESCRIPTION	BY	DATE
0	INITIAL SUBMISSION	JKC	7/19/17
1	PB RE-SUBMISSION	JKC	10/16/17
2	PB RE-SUBMISSION	JKC	12/05/17
3	100% D.D.	JKC	12/22/17
4	NHDES AoT SUBMISSION	JKC	1/18/18
5	50% C.D.	JKC	2/16/18
6	PERMIT SET	JKC	3/16/18
7	BID SET	JKC	4/02/18
8	100% C.D.	JKC	4/13/18
9	FINAL TOWN APPROVAL	JKC	5/23/18

DRAWN BY: RMB
APPROVED BY: JKC
DRAWING FILE: 4836DS.DWG

SCALE: N.T.S.

LAND OWNER - SUBJECT PARCEL:
ROCKINGHAM PROPERTIES 1, LTD
P.O. BOX 423
BELMONT, MA 02178

APPLICANT:
THE RIVERWOODS GROUP
5 WHITE OAK DRIVE
EXETER, NH 03833

PROJECT:
RIVERWOODS DURHAM
STONE QUARRY DRIVE
DURHAM, NH

TITLE:
WATER DETAIL SHEET

SHEET NUMBER:
C - 6.7

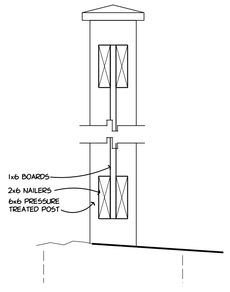

SECTION 2 / G230
1/4" = 1'-0"

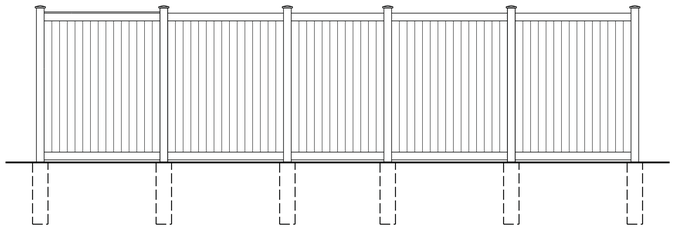

TRASH/GENERATOR ENCLOSURE ELEVATION
1/4" = 1'-0" — 4 / G730

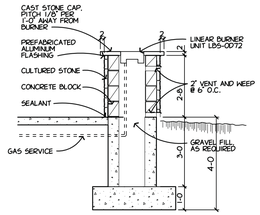

FIRE PIT SECTION C / G230
3/8" = 1'-0"

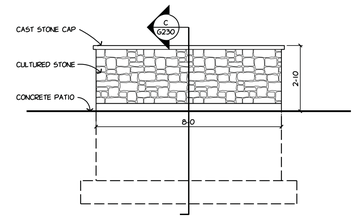

FIRE PIT ELEVATION 6 / G730
3/8" = 1'-0"

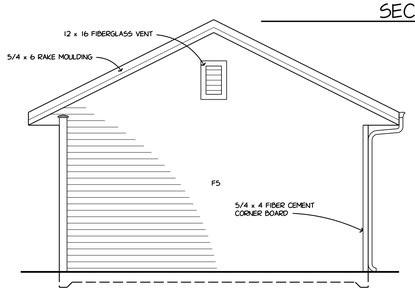

GARAGE ELEVATION
1/4" = 1'-0" — 4 / G730

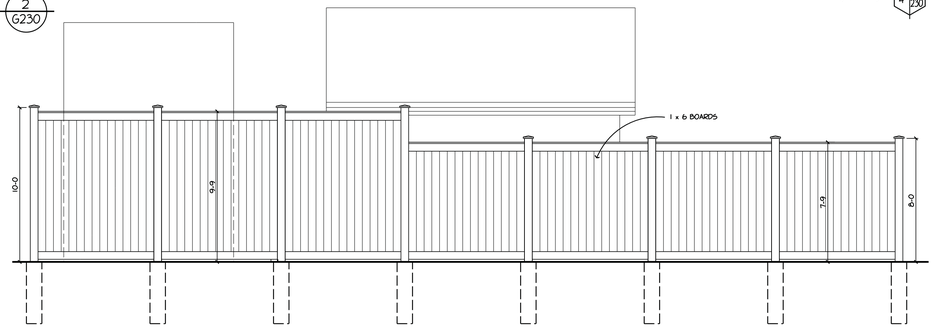

TRASH/GENERATOR ENCLOSURE ELEVATION
1/4" = 1'-0" — 3 / G730

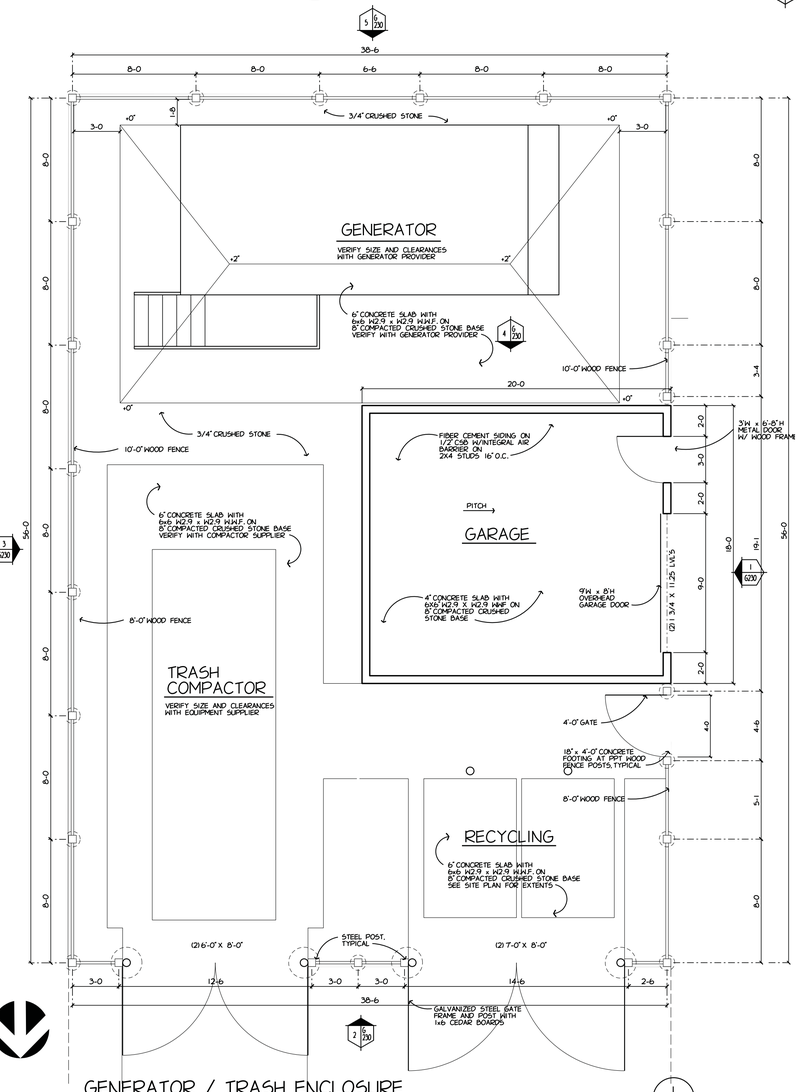

GENERATOR / TRASH ENCLOSURE
1/4" = 1'-0" — 1 / G230

NOTE: PROVIDE ALTERNATE BID FOR VINYL FENCE AND GATE SYSTEM.

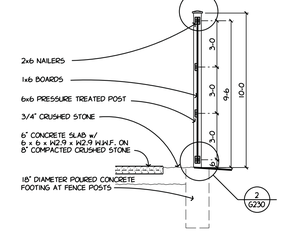

SECTION B / G230
1/4" = 1'-0"

1 x 6 R.S. CEDAR BOARDS w/ 1/4" SPACE ANCHORED w/ 2" STAINLESS STEEL SCREWS, 2 SCREWS TOP & BOTTOM PER BOARD

GATE TOP RAIL

GATE STRUCTURAL DESIGN BY GATE MANUFACTURER/ FABRICATOR

ALL GATE PARTS TO BE GALVANIZED

GATE DETAIL 1 / G230
N.T.S.

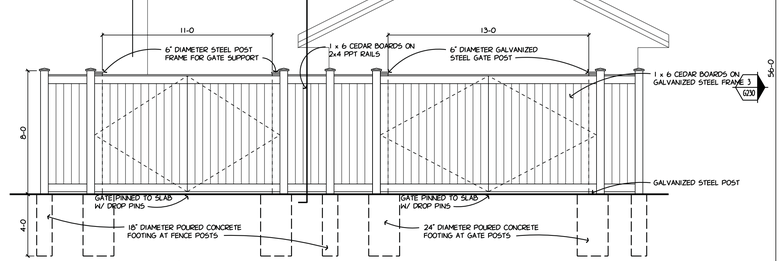

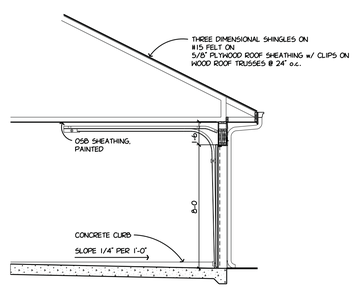

SECTION A / G230
1/4" = 1'-0"

TRASH/GENERATOR ENCLOSURE ELEVATION
1/4" = 1'-0" — 2 / G730

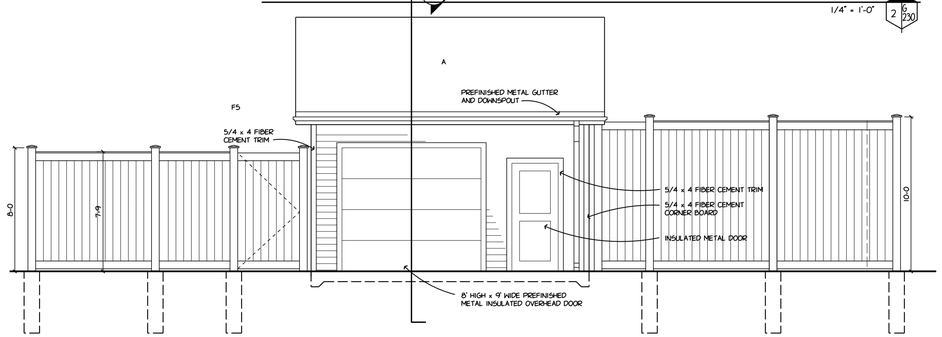

GARAGE ELEVATION
1/4" = 1'-0" — 1 / G730

Riverwoods Durham CCRC
Durham New Hampshire

AG Architecture

1414 UNDERWOOD AVE.
WAUWATOSA, WI 53213

414.431.3131 TEL
414.431.0331 FAX

WWW.AGARCH.COM

Architecture
Engineering
Planning

REVISIONS

THIS DRAWING, ITS DESIGN CONCEPT AND ITS DETAILS ARE THE SOLE PROPERTY OF AG ARCHITECTURE, INC. AND SHALL NOT BE COPIED IN ANY FORM OR MANNER WITHOUT WRITTEN AUTHORIZATION OF ITS DESIGNER/CREATOR.

DRAWN BY
AG

DATE
13 APR 2018

PROJECT
163301

SHEET NO.

SITE DETAILS G230 TYPICAL

PLOT PARAMETERS - FILE: K:\163301\CAD\G230.DGN
PLOT STYLE TABLE: AG_ARCH_BW.CTB
USING DRIVER: K:\DWG\ACAD15\ARCH\WIN\ECF15\HPGL2.PC15
MODEL: PLOT SHEET
PAPER SIZE: 24" X 36"
LAST SAVED: 4/13/2018