NOTES:
1. MANUFACTURER: AMERISTAR, MODEL: AEGIS MAJESTIC II
2. COLOR: BLACK
3. INSTALL FENCE PER MANUFACTURERS RECOMENDATIONS.

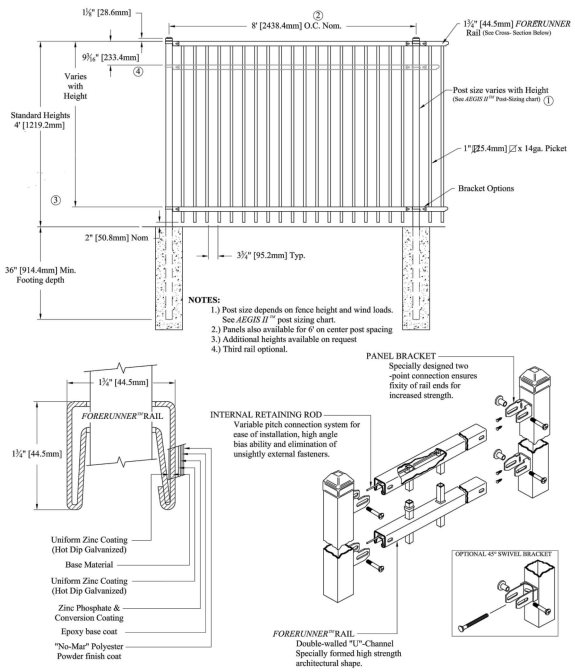

A FENCE - 48-INCH 11
SCALE 1/2" = 1'-0"

REVISIONS AFTER ADVERTISEMENT (5-20-24)	
10	TREE GUARDS ARE NO LONGER INCLUDED IN THE CONTRACT.
11	FENCE - 48-INCH WILL BE PROVIDED BY THE TOWN, AND MOUNTING SLEEVES SHALL BE INSTALLED BY THE CONTRACTOR

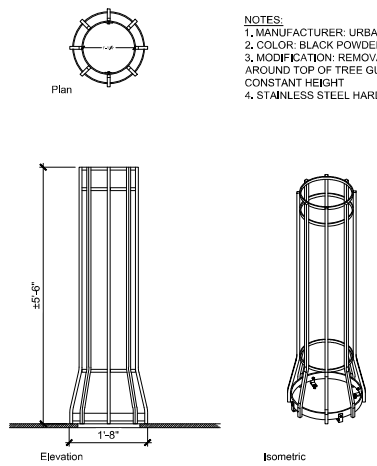

NOTES:
1. MANUFACTURER: URBAN ACCESSORIES, MODEL: OT
2. COLOR: BLACK POWDER COAT
3. MODIFICATION: REMOVAL OF DECORATIVE CIRCULAR RINGS AROUND TOP OF TREE GUARD. VERTICAL BARS CUT TO CONSTANT HEIGHT
4. STAINLESS STEEL HARDWARE.

C TREE GUARD 10
SCALE N.T.S.

C L2.6 TREE GUARD

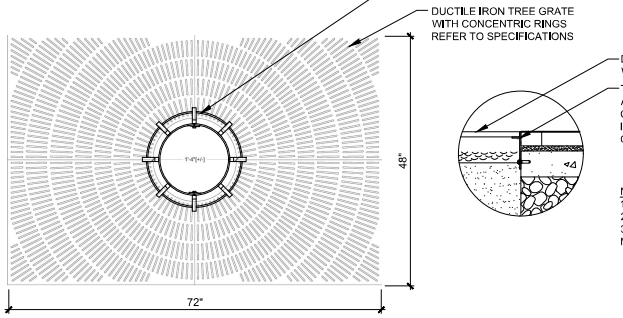

NOTES:
1. MANUFACTURER: URBAN ACCESSORIES, MODEL: KIVA
2. COLOR: NON SLIP - BLACK POWDER COAT FINISH
3. INSTALL TREE GRATE AND FRAME, PER MANUFACTURES RECOMMENDATIONS.

B TREE GRATE
SCALE 1" = 1'-0"

d-tree grate.dwg

NUMBER	DATE	STATION	STATION	DESCRIPTION
REVISIONS AFTER PROPOSAL				

SNR PROCESSED	DATE	
NEW DESIGN	DATE	
SHEET CHECKED	DATE	
AS BUILT DETAILS	DATE	

MADBURY ROAD COMPLETE STREETS PROJECT - SEGMENT 1

TOWN OF DURHAM, NEW HAMPSHIRE

vhb

L2.6 LANDSCAPE DETAILS

DATE PLOTTED	VHB PROJECT NO.	DRAWING	SEGMENT NO.	SHEET NO.	TOTAL SHEETS
3/6/2024	52830.00	3-52830-LA DETAILS.dwg	1	35	71